LC²MOS
GSM Baseband I/O Port

AD7002

FEATURES
Single +5 V Supply
Transmit Channel
- **On-Chip GMSK Modulator**
- **Two 10-Bit D/A Converters**
- **Analog Reconstruction Filters**
- **Power-Down Mode**

Receive Channel
- **Two Sigma-Delta A/D Converters**
- **FIR Digital Filters**
- **On-Chip Offset Calibration**
- **Power-Down Mode**

3 Auxiliary D/A Converters
Power-Down Modes
On-Chip Voltage Reference
Low Power
44-Lead PQFP

APPLICATIONS
GSM
PCN

GENERAL DESCRIPTION

The AD7002 is a complete low power, two-channel, input/output port with signal conditioning. The device is used as a baseband digitization subsystem, performing signal conversion between the DSP and the IF/RF sections in the Pan-European telephone system (GSM).

The transmit path consists of an onboard digital modulator, containing all the code necessary for performing Gaussian Minimum Shift Keying (GMSK), two high accuracy, fast DACs with output reconstruction filters. The receive path is composed of two high performance sigma-delta ADCs with digital filtering. A common bandgap reference feeds the ADCs and signal DACs.

Three control DACs (AUX DAC1 to AUX DAC3) are included for such functions as AFC, AGC and carrier signal shaping. In addition, AUX FLAG may be used for routing digital control information through the device to the IF/RF sections.

As it is a necessity for all GSM mobile systems to use the lowest power possible, the device has power-down or sleep options for all sections (transmit, receive and auxiliary).

The AD7002 is housed in 44-lead PQFP (Plastic Quad Flatpack).

FUNCTIONAL BLOCK DIAGRAM

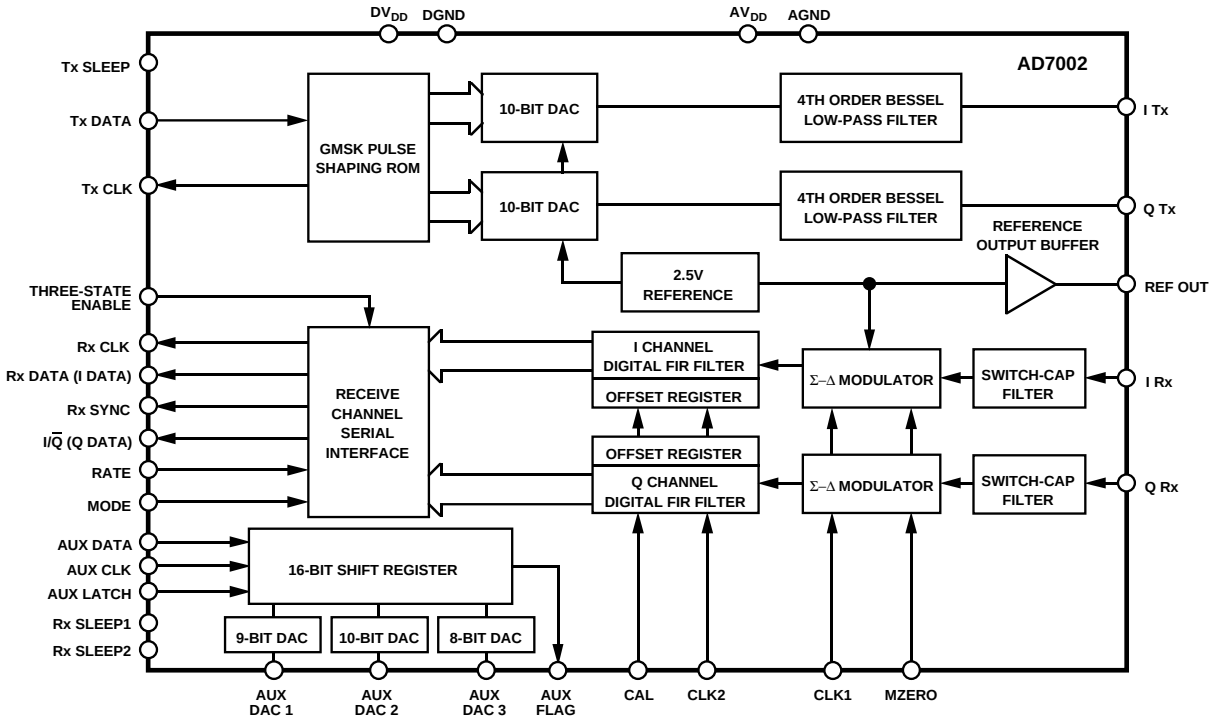

REV. B

Information furnished by Analog Devices is believed to be accurate and reliable. However, no responsibility is assumed by Analog Devices for its use, nor for any infringements of patents or other rights of third parties which may result from its use. No license is granted by implication or otherwise under any patent or patent rights of Analog Devices.

One Technology Way, P.O. Box 9106, Norwood, MA 02062-9106, U.S.A.
Tel: 617/329-4700 World Wide Web Site: http://www.analog.com
Fax: 617/326-8703
© Analog Devices, Inc., 1997

AD7002–SPECIFICATIONS[1] (AV_{DD} = +5 V ± 10%; DV_{DD} = +5 V ± 10%; AGND = DGND = 0 V, f_{CLK1} = f_{CLK2} = 13 MHz; T_A = T_{MIN} to T_{MAX}, Rx $SLEEP_1$ = Rx $SLEEP_2$ = Tx SLEEP = DV_{DD}, unless otherwise noted)

Parameter	AD7002A	Units	Test Conditions/Comments
ADC SPECIFICATIONS			
Resolution	12	Bits	Rx SLEEP = 0 V, Tx SLEEP = V_{DD}
Signal Input Span	±V_{REF}/2	Volts	Biased on V_{REF} (2.5 V)
Sampling Rate	13	MSPS	
Output Word Rate	270.8	kHz	RATE 0
	541.7	kHz	RATE 1
Accuracy			
Integral	±1	LSB typ	
Differential[2]	0		
Bias Offset Error	±6.5	LSB max	After External Calibration; MZERO Low
	±8	LSB typ	After Internal Calibration; MZERO High
Input Resistance (DC)	300	kΩ typ	
Input Capacitance	10	pF typ	
Dynamic Specifications			Input Frequency = 67.7 kHz
Dynamic Range	64	dB typ	
Signal to (Noise+Distortion)	62	dB min	
Gain Error	±0.5	dB max	Input Frequency = 67.7 kHz, w.r.t. 2.5 V
Gain Match Between Channels	±0.15	dB max	Input Frequency = 67.7 kHz
Filter Settling Time	47	µs typ	
Frequency Response			
0 kHz–100 kHz	±0.05	dB max	
110 kHz	–0.8	dB max	
122 kHz	–3.0	dB max	
200 kHz	–66	dB max	
400 kHz–6.5 MHz	–72	dB max	
Absolute Group Delay	23	µs typ	
Group Delay Between Channels (0 kHz–120 kHz)	5	ns typ	
Coding	Twos Complement		
Power-Down Option	Yes		Rx SLEEP = V_{DD}, Independent of Transmit
TRANSMIT DAC SPECIFICATIONS			
Resolution	10	Bits	Rx SLEEP = V_{DD}, Tx SLEEP = 0 V
Number of Channels	2		
Update Rate	4.33	MSPS	16× Oversampling of the Bit Rate
DC Accuracy			
Integral	±0.7	LSB typ	
Differential	±1.0	LSB typ	
Output Signal Span	±V_{REF}/2	Volts	Centered on V_{REF} Nominal (100 kΩ/20 pF Load)
Output Signal Full-Scale Accuracy	±1	dB max	w.r.t. 2.5 V
Offset Error	±25	mV max	10 0000 0000 Loaded to DAC
I Tx & Q Tx Gain Matching	±0.15	dB max	
Absolute Group Delay	10	µs typ	Measured at 67.7 kHz
Group Delay Linearity (0 kHz–120 kHz)	30	ns typ	Each Channel, 10 kHz < F_{OUT} < 100 kHz
Phase Matching Between Channels	0.5	° typ	Generating 67.7 kHz Sine Waves
GMSK Spectrum Mask[3]			
100 kHz	–3	dB min	
200 kHz	–32	dB min	
250 kHz	–35	dB min	
400 kHz	–63	dB min	
0.6 MHz	–71	dB min	
4.3 MHz	–63	dB min	
6.5 MHz	–63	dB min	
GMSK Phase Trajectory Error[3]	2	° rms max	
	6	° peak max	
Maximum Phase Effect Instance[3]	9	µs typ	
Output Impedance			
I Tx	120	Ω typ	
Q Tx	120	Ω typ	
GMSK ROM	Yes		Contains GMSK Coding, Four-Bit Impulse Response
Power-Down Option	Yes		Tx SLEEP = V_{DD}, Independent of Receive

Parameter	AD7002A			Units	Test Conditions/Comments
AUXILIARY DAC SPECIFICATIONS	AUX1	AUX2	AUX3		
Resolution	9	10	8	Bits	
DC Accuracy					
Integral	±2	±2	±1	LSB max	
Differential	±1	±1	±1	LSB max	Guaranteed Monotonic
Offset Error	±2	±4	±1	LSB max	
Gain Error	±4	±4	±2	LSB max	
LSB Size	4.88	2.44	9.77	mV typ	
Output Signal Span	0 to V_{REF}	0 to V_{REF}	0 to V_{REF}	Volts	Unloaded Output
Output Impedance	10	10	10	kΩ max	AUX DACs Have Unbuffered Resistive Outputs
	8	8	8	kΩ typ	
Coding	Binary	Binary	Binary		
Power-Down	Yes	Yes	Yes		Power-Down Is Implemented by Loading All 1s or All 0s
REFERENCE SPECIFICATIONS					
REFOUT, Reference Output	2.4/2.6			V min/V max	R_L = 100 kΩ, C_L = 1 nF
REFOUT, Reference Output @ +25°C	2.5			V typ	R_L = 100 kΩ, C_L = 1 nF
Reference Temperature Coefficient	100			ppm/°C typ	
Reference Variation[4]	±10			mV max	
Output Impedance	60			Ω typ	
LOGIC INPUTS					
V_{INH}, Input High Voltage	V_{DD} – 0 9			V min	
V_{INL}, Input Low Voltage	0.9			V max	
I_{INH}, Input Current	10			µA max	
C_{IN}, Input Capacitance	10			pF max	
LOGIC OUTPUTS					
V_{OH}, Output High Voltage	4.0			V min	$\|I_{OUT}\| \leq 200$ µA
V_{OL}, Output Low Voltage	0.4			V max	$\|I_{OUT}\| \leq 1.6$ mA
POWER SUPPLIES					
AV_{DD}	4.5/5.5			V min/V max	
DV_{DD}	4.5/5.5			V min/V max	
I_{DD}					
All Sections Active	30			mA max	
ADC and Auxiliary Paths Active[5]	18			mA max	Tx SLEEP = V_{DD}
	15			mA typ	
Transmit DAC and AUX Paths Active[6]	14			mA max	Rx $SLEEP_1$ = Rx $SLEEP_2$ = V_{DD}
	11			mA typ	
Auxiliary Path only Active[5, 6, 7]	2			mA max	Tx SLEEP = Rx $SLEEP_1$ = Rx $SLEEP_2$ = V_{DD}

NOTES
[1]Operating temperature range: A Version: –40°C to +85°C.
[2]Unmeasurable: sigma-delta conversion is inherently free of differential nonlinearities.
[3]See terminology.
[4]Change in reference voltage due to a change in Tx SLEEP or Rx SLEEP modes.
[5]Measured while the digital inputs to the transmit interface are static.
[6]Measured while the digital inputs to the receive interface are static.
[7]Measured while the digital inputs to the auxiliary interface are static.

Specifications subject to change without notice.

ABSOLUTE MAXIMUM RATINGS[1]

(T_A = +25°C unless otherwise noted)

DV_{DD} to AGND	–0.3 V to +7 V
AV_{DD} to AGND	–0.3 V to +7 V
AGND to DGND	–0.3 V to +0.3 V
Digital Input Voltage to DGND	–0.3 V to DV_{DD} + 0.3 V
Analog Input Voltage to AGND	–0.3 V to AV_{DD} + 0.3 V
Input Current to Any Pin Except Supplies[2]	±10 mA
Operating Temperature Range	
Industrial Plastic (A Version)	–40°C to +85°C
Storage Temperature Range	–65°C to +150°C
Lead Temperature (Soldering, 10 secs)	+300°C
Power Dissipation (Any Package) to +75°C	450 mW
Derates Above +75°C by	10 mW/°C

NOTES

[1]Stresses above those listed under Absolute Maximum Ratings may cause permanent damage to the device. This is a stress rating only; functional operation of the device at those or any other conditions above those listed in the operational sections of this specifications is not implied. Exposure to absolute maximum rating conditions for extended periods may affect device reliability.

[2]Transient currents of up to 100 mA will not cause SCR latch-up.

PIN DESCRIPTION

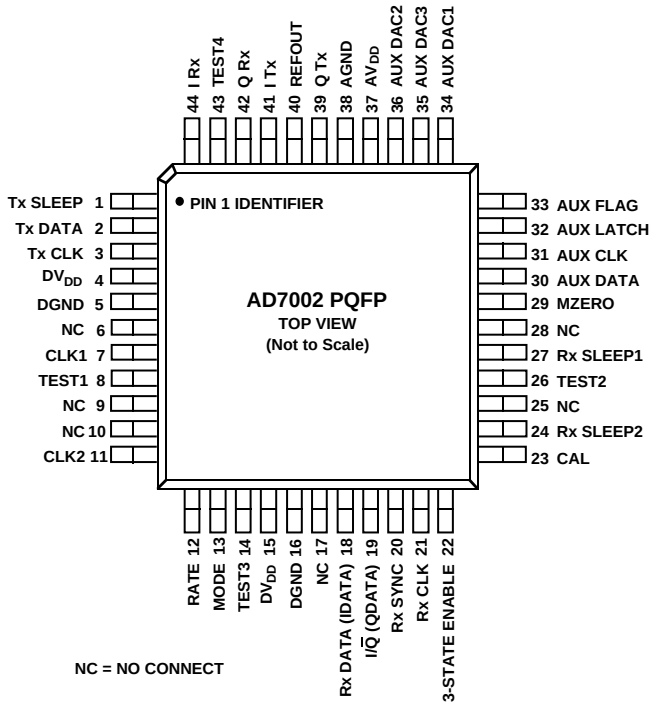

ORDERING GUIDE

Model	Temperature Range	Package Description	Package Option
AD7002AS	–40°C to +85°C	Plastic Quad Flatpack	S-44

TERMINOLOGY

Absolute Group Delay

Absolute group delay is the rate of change of phase versus frequency, dθ/df. It is expressed in microseconds.

Bias Offset Error

This is the offset error (in LSBs) in the ADC section.

Differential Nonlinearity

This is the difference between the measured and the ideal 1 LSB change between any two adjacent codes in the DAC or ADC.

Dynamic Range

Dynamic Range is the ratio of the maximum output signal to the smallest output signal the converter can produce (1 LSB), expressed logarithmically, in decibels (dB = $20\log_{10}$ (ratio)). For an N-bit converter, the ratio is theoretically very nearly equal to 2^N (in dB, $20N\log_{10}(2) = 6.02N$). However, this theoretical value is degraded by converter noise and inaccuracies in the LSB weight.

Full-Scale Accuracy

This is the measure of the ADC full-scale error after the offset has been adjusted out.

Gain Error

This is a measure of the output error between an ideal DAC and the actual device output with all ls loaded after offset error has been adjusted out and is expressed in LSBs. In the AD7002, gain error is specified for the auxiliary section.

Gain Matching Between Channels

This is the gain matching between the ITx and QTx channel and is expressed in dBs.

GMSK Spectrum Mask

This is the combined output spectrum of the I and Q analog outputs when transmitting a random sequence of data bits on the AD7002 transmit channel.

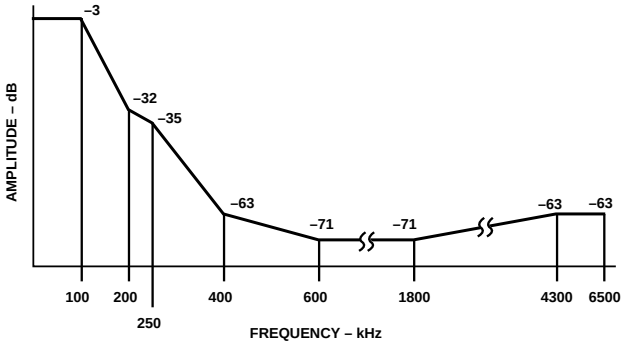

AD7002 Transmit GMSK Spectrum Mask

CAUTION

ESD (electrostatic discharge) sensitive device. Electrostatic charges as high as 4000 V readily accumulate on the human body and test equipment and can discharge without detection. Although the AD7002 features proprietary ESD protection circuitry, permanent damage may occur on devices subjected to high energy electrostatic discharges. Therefore, proper ESD precautions are recommended to avoid performance degradation or loss of functionality.

GMSK Phase Trajectory Error
This is a measure of the phase error between the transmitted phase of an ideal GMSK modulator and the actual phase transmitted by the AD7002, when transmitting a random sequence of data bits. It is specified as a peak phase error and also as an rms phase error.

Group Delay Linearity
The group delay linearity, or differential group delay, is the group delay over the full band relative to the group delay at one particular frequency. The reference frequency for the AD7002 is 1 kHz.

Group Delay Between Channels
This is the difference between the group delay of the I and Q channels and is a measure of the phase matching characteristics of the two.

Integral Nonlinearity
This is the maximum deviation from a straight line passing through the endpoints of the DAC or ADC transfer function.

Maximum Phase Effect Instance
This is the time at which a transmitted data bit will have its maximum phase change at the ITx and QTx outputs (see figure). This time includes the delay in the GMSK modulator and in the Analog low-pass filters. Maximum phase effect instance is measured from the Tx CLK falling edge, which latches the data bit, to the ITx and QTx analog outputs.

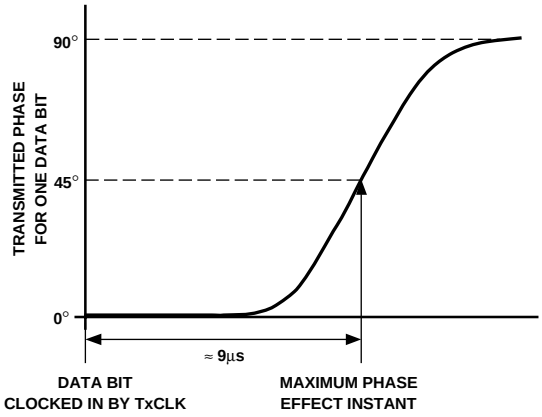

Transmit Channel Maximum Phase Effect Instance

Output Rate
This is the rate at which data words are made available at the Rx DATA pin (Mode 0) or the IDATA and QDATA pins (Mode 1). There are two rates, depending on whether the device is operated in RATE0 or RATE1.

Offset Error
This is the amount of offset, w.r.t. V_{REF} in the transmit DACs and the auxiliary DACs and is expressed in mVs for the Transmit section and in LSBs for the Auxiliary section.

Output Impedance
This is a measure of the drive capability of the auxiliary DAC outputs and is expressed in kΩs.

Output Signal Span
This is the output signal range for the Transmit Channel section and the Auxiliary DAC section. For the transmit channel the span is ±1.25 volts centered on 2.5 volts, and for the Auxiliary DAC section it is 0 to $+V_{REF}$.

Output Signal Full-Scale Accuracy
This is the accuracy of the full-scale output (all 1s loaded to the DACs) on each transmit channel measured w.r.t. 25 V and is expressed in dBs.

Phase Matching Between Channels
This is a measure of the phase matching characteristics of the I and Q transmit channels. It is obtained by transmitting all ones and then measuring the difference between the actual phase shift between the I and Q outputs and the ideal phase shift of 90°.

Sampling Rate
This is the rate at which the modulators on the receive channels sample the analog input.

Settling Time
This is the digital filter settling time in the AD7002 receive section. On initial power-up, or after returning from the sleep mode, it is necessary to wait this amount of time to obtain useful data.

Signal Input Span
The input signal range for the I and Q channels is biased about V_{REF}. It can go ±1.25 volts about this point.

Signal to (Noise + Distortion) Ratio
This is the measured ratio of signal-to-(noise + distortion) at the output of the receive channel. The signal is the rms amplitude of the fundamental. Noise is the rms sum of all amplitude of the fundamental. Noise is the rms sum of all nonfundamental signals up to half the sampling frequency ($f_S/2$), excluding dc. The ratio is dependent upon the number of quantization levels in the digitization process; the more levels, the smaller the quantization noise. The theoretical signal-to-(noise+distortion) ratio for a sine wave is given by:

$$\text{Signal to (Noise + Distortion)} = (6.02N + 1.76)\ \text{dB}$$

INPUT CLOCK TIMING[1] (AV_{DD} = +5 V ± 10%; DV_{DD} = +5 V ± 10%; AGND = DGND = 0 V; T_A = T_{MIN} to T_{MAX}, unless otherwise noted)

Parameter	Limit at T_A = –40°C to +85°C	Units	Description
t_1	76	ns min	CLK1, CLK2, AUX CLK Cycle Time
t_2	30	ns min	CLK1, CLK2, AUX CLK High Time
t_3	30	ns min	CLK1, CLK2, AUX CLK Low Time

TRANSMIT SECTION TIMING (AV_{DD} = +5 V ± 10%; DV_{DD} = +5 V ± 10%; AGND = DGND = 0 V, f_{CLK1} = f_{CLK2} = 13 MHz; T_A = T_{MIN} to T_{MAX}, unless otherwise noted)

Parameter	Limit at T_A = –40°C to +85°C	Units	Description
t_4	10	ns min	Tx SLEEP Hold Time
t_5	20	ns min	Tx SLEEP Setup Time
t_6	24 t_1	ns min	Tx CLK Active After CLK1 Rising Edge Following
	24 t_1 + 80	ns max	Tx SLEEP Low
t_7	48 t_1	ns	Tx CLK Cycle Time
t_8	24 t_1	ns	Tx CLK High Time
t_9	24 t_1	ns	Tx CLK Low Time
t_{10}	0	ns min	Propagation Delay from CLK1 to Tx CLK
	100	ns max	
	30	ns max	
t_{11}	30	ns max	Data Setup Time
t_{12}	10	ns min	Data Hold Time
t_{13}	0	ns min	Tx CLK to Tx SLEEP Asserted for Last Tx CLK Cycle[2]
	23 t_1	ns max	
t_{14}	10	ns typ	Digital Output Rise Time[3]
t_{15}	10	ns typ	Digital Output Fall Time[3]

AUXILIARY DAC TIMING (AV_{DD} = +5 V ± 10%; DV_{DD} = +5 V ± 10%; AGND = DGND = 0 V, $f_{AUX\ CLK}$ = 13 MHz; T_A = T_{MIN} to T_{MAX}, unless otherwise noted)

Parameter	Limit at T_A = –40°C to +85°C	Units	Description
t_{16}	10	ns min	AUX DATA Setup Time
t_{17}	10	ns min	AUX DATA Hold Time
t_{18}	25	ns min	AUX LATCH to SCLK Falling Edge Setup Time
t_{19}	20	ns min	AUX LATCH to SCLK Falling Edge Hold Time
t_{20}	50	ns max	AUX LATCH High to AUX FLAG Valid Delay
t_{21}	10	ns typ	Digital Output Rise Time
t_{22}	10	ns typ	Digital Output Fall Time

NOTES
[1]Sample tested at +25°C to ensure compliance. All input signals are specified with tr = tf = 5 ns (10% to 90% of 5 V) and timed from a voltage level of 1.6 V.
[2]t_{13} specifies a window, that Tx SLEEP should be asserted for the current Tx CLK to be the last prior to entering SLEEP mode.
[3]Digital output rise and fall times specify the time required for the output to go between 10% and 90% of 5 V.

Specifications subject to change without notice.

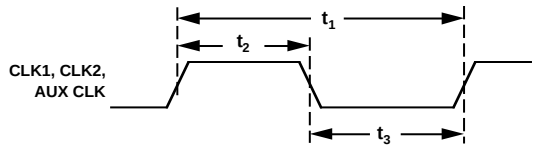

Figure 1. Clock Timing

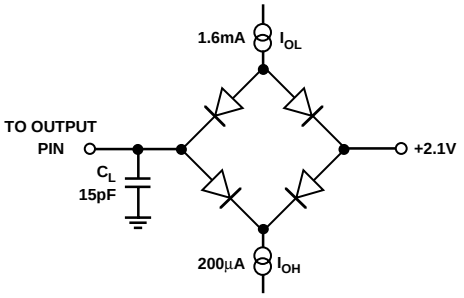

Figure 2. Load Circuit for Timing Specifications

RECEIVE SECTION TIMING[1] (AV_{DD} = +5 V ± 10%; DV_{DD} = +5 V ± 10%; AGND = DGND = 0 V, f_{CLK1} = f_{CLK2} = 13 MHz; T_A = T_{MIN} to T_{MAX}, unless otherwise noted)

Parameter	Limit at T_A = –40°C to +85°C	Units	Description
t_{23}	0	ns min	Rx SLEEP Hold Time After CLK1, CLK2 High
t_{24}	25	ns min	Rx SLEEP Setup Time Before CLK1, CLK2 High
t_{25}	0	ns min	Rx SYNC to Rx SLEEP Asserted[2]
	39 t_1	ns max	RATE 0
	15 t_1	ns max	RATE 1
t_{26}			Rx CLK Active After CLK1 Rising Edge Following Falling Edge of Rx SLEEP
	32 t_1 + t_2	ns	MODE 0
	31 t_1 + t_2	ns	MODE 1
t_{27}			Rx CLK Cycle Time[3]
	t_1	ns	MODE 0
	2 t_1	ns	MODE 1
t_{28}			Rx CLK High Pulse Width
	25	ns min	MODE 0
	90	ns min	MODE 1
t_{29}			Rx CLK Low Pulse Width
	25	ns min	MODE 0
	30	ns min	MODE 1
t_{30}	10	ns min	Propagation Delay from CLK1, CLK2 High to Rx CLK High
	30	ns max	
t_{31}	20	ns min	Rx SYNC Valid Prior to Rx CLK Falling
t_{32}			Rx SYNC High Pulse Width
	t_1	ns	MODE 0
	2 t_1	ns	MODE 1
t_{33}			Rx SYNC Cycle Time[3]
	24 t_1	ns	MODE 0 RATE 0
	12 t_1	ns	MODE 0 RATE 1
	48 t_1	ns	MODE 1 RATE 0
	24 t_1	ns	MODE 1 RATE 1
t_{34}			Rx DATA Valid After Rx CLK Rising Edge
	5	ns max	MODE 0
	t_1 + 5	ns max	MODE 1
t_{35}	5	ns max	MODE 0 only, Propagation Delay from Rx CLK Rising Edge to I/$\overline{Q}$
t_{36}	10	ns typ	Digital Output Rise Time[4]
t_{37}	10	ns typ	Digital Output Fall Time[4]

CALIBRATION AND CONTROL TIMING (AV_{DD} = +5 V ± 10%; DV_{DD} = +5 V ± 10%; AGND = DGND = 0 V, $f_{AUX\ CLK}$ = 13 MHz; T_A = T_{MIN} to T_{MAX}, unless otherwise noted)

Parameter	Limit at T_A = –40°C to +85°C	Units	Description
t_{38}	25	ns min	SLEEP to CAL Setup Time
t_{39}	608 t_1	ns min	CAL Pulse Width
t_{40}	25	ns min	RATE, MODE or THREE-STATE ENABLE Setup Time

NOTES
[1]Sample tested at +25°C to ensure compliance. All input signals are specified with tr = tf = 5 ns (10% to 90% of 5 V) and timed from a voltage level of 1.6 V.
[2]t_{25} specifies a window, after Rx SYNC which marks the beginning of I data, that Rx SLEEP should be asserted for the subsequent IQ data pair to be last prior to entering SLEEP mode.
[3]See Figure 2 for test circuit.
[4]Digital output rise and fall times specify the time required for the output to go between 10% and 90% of 5 V.

Specifications subject to change without notice.

CIRCUIT DESCRIPTION

TRANSMIT SECTION

The transmit section of the AD7002 generates GMSK I and Q waveforms in accordance with GSM recommendation 5.04. This is accomplished by a digital GMSK modulator, followed by 10-bit DACs for the I and Q channels and on-chip reconstruction filters. The GMSK (Gaussian Minimum Shift Keying) digital modulator generates I and Q signals, at 16× oversampling, in response to the transmit data stream. The I and Q data streams drive 10-bit DACs, which are filtered by on-chip Bessel low-pass filters.

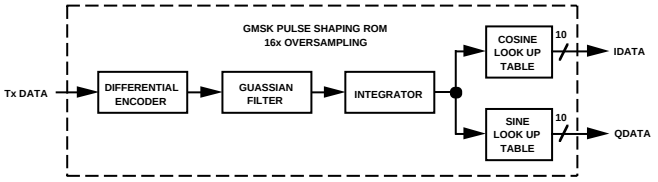

Figure 3. GMSK Functional Block Diagram

Table I. Truth Table for the Differential Encoder

Tx $DATA_i$	Tx $DATA_{i-1}$	Differentially Encoded Data
0	0	+1
0	1	–1
1	0	–1
1	1	+1

GMSK Modulator

Figure 3 shows the functional block diagram of the GMSK modulator. This is implemented using control logic with a ROM look up table, to generate I and Q data samples at 16 times the transmit data rate. The transmit data (Tx DATA) is first differentially encoded as specified by GSM 5.04 section 2.3 (Table I). The GMSK modulator generates 10-bit I and Q waveforms (Inphase and Quadrature), in response to the encoded data, which are loaded into the 10-bit I and Q transmit DACs. The Gaussian filter, in the GMSK modulator, has an impulse response truncated to four data bits.

When the transmit section is brought out of sleep mode (Tx SLEEP low), the modulator is reset to a transmitting all 1s state. When Tx SLEEP is asserted (Tx SLEEP high), the transmit section powers down, with the I Tx and Q Tx outputs connected to V_{REF} through a nominal impedance of 80 kΩ.

Reconstruction Filters

The reconstruction filters smooth the DAC output signals, providing continuous time I and Q waveforms at the output pins. These are Bessel low-pass filters with a cutoff frequency of approximately 300 kHz. Figure 5 shows a typical transmit filter frequency response, while Figure 6 shows a typical plot of group delay versus frequency. The filters are designed to have a linear phase response in the passband and due to the reconstruction filters being on-chip, the phase mismatch between the I and Q transmit channels is kept to a minimum.

Transmit Section Digital Interface

Figure 4 shows the timing diagram for the transmit interface. Tx SLEEP is sampled on the falling edge of CLK1. When Tx SLEEP is brought low, Tx CLK becomes active after 24 master clock cycles. Tx CLK can be used to clock out the transmit data from the ASIC or DSP on the rising edge and Tx DATA is clocked into the AD7002 on the falling edge of Tx CLK. When Tx SLEEP is asserted the transmit section is immediately put into sleep mode, disabling Tx CLK and powering down the transmit section.

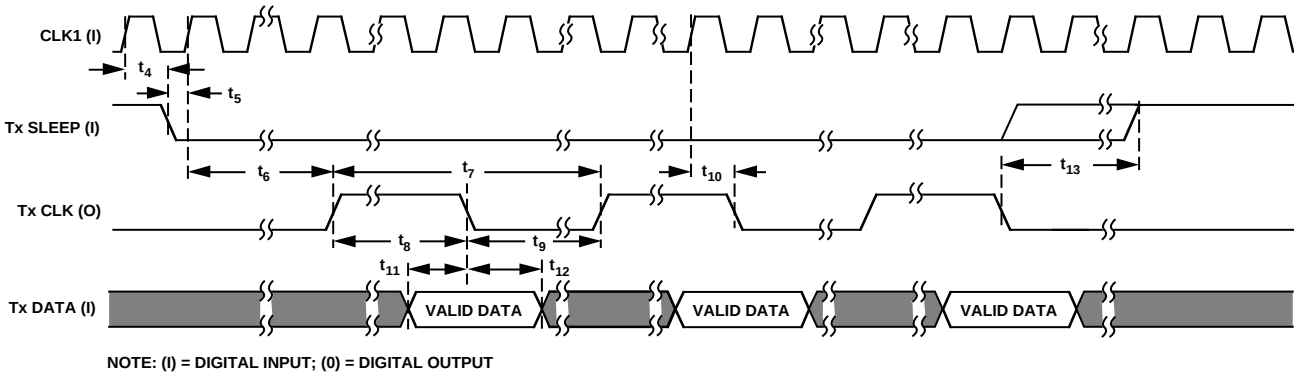

Figure 4. Transmit Section Timing Diagram

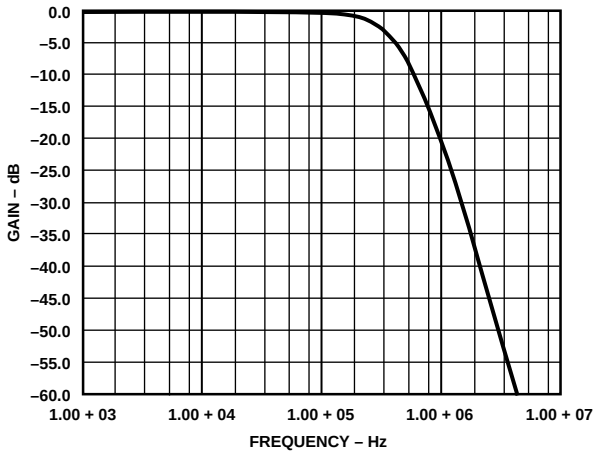

Figure 5. Transmit Filter Frequency Response

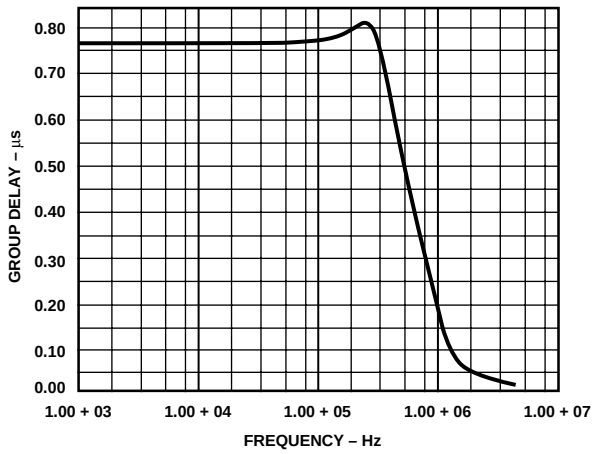

Figure 6. Transmit Filter Group Delay

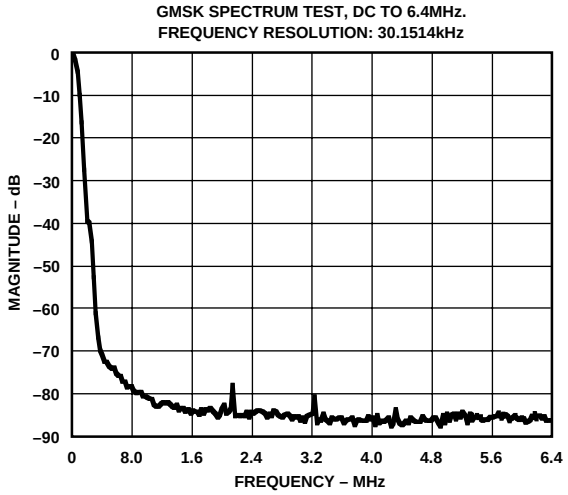

Figure 7. Typical Spectrum Plot of the Transmit Channel When Transmitting Random Data (0 MHz to 6.4 MHz)

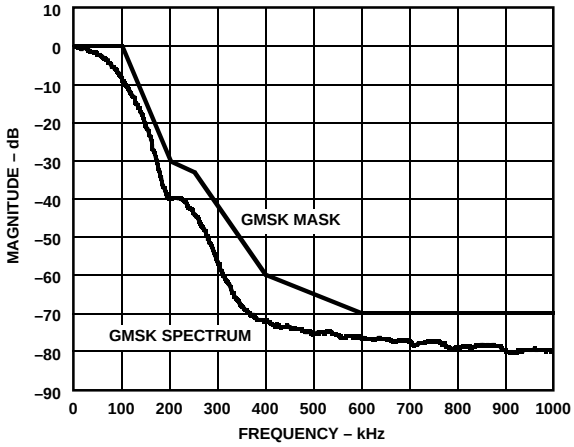

Figure 8. Typical Spectrum Plot of the Transmit Channel When Transmitting Random Data (0 MHz to 1 MHz)

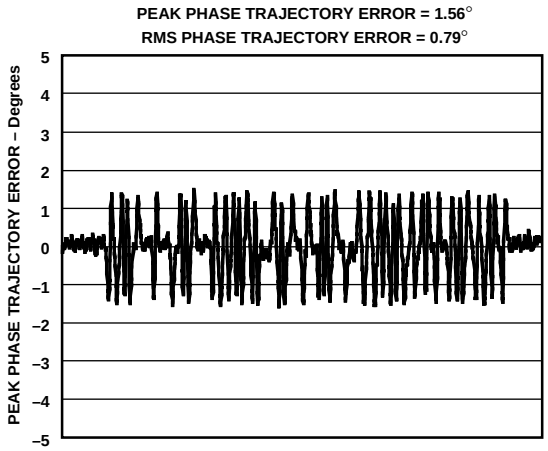

Figure 9. Typical Plot of the Transmit Phase Trajectory Error

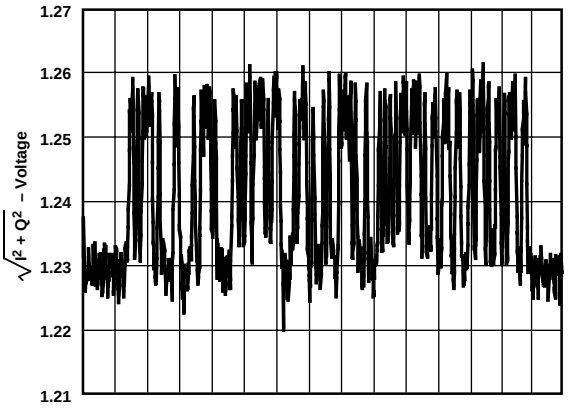

Figure 10. Typical Plot of the Composite Vector Magnitude

RECEIVE SECTION

The receive section consists of I and Q receive channels, each comprised of a simple switched capacitor filter followed by a 12-bit sigma-delta ADC. The data is available on a flexible serial interface, interfacing easily to most DSPs. The data can be configured to be one of two formats and is also available at two sampling rates. Onboard digital filters, which form part of the sigma-delta ADCs, also perform critical system level filtering. Their amplitude and phase response characteristics provide excellent adjacent channel rejection. The receive section is also provided with a low power sleep mode to place the receive section on standby between receive bursts, drawing only minimal current.

Switched Capacitor Input

The receive section analog front end is sampled at 13 MHz by a switched capacitor filter. The filter has a zero at 6.5 MHz as shown in Figure 11a. The receive channel also contains a digital low-pass filter (further details are contained in the following section) that operates at a clock frequency of 6.5 MHz. Due to the sampling nature of the digital filter, the pass band is repeated about the operating clock frequency and at multiples of the clock frequency (Figure 11b). Because the first null of the switched capacitor filter coincides with the first image of the digital filter, this image is attenuated by an additional 30 dBs (Figure 11c), further simplifying the external antialiasing requirements.

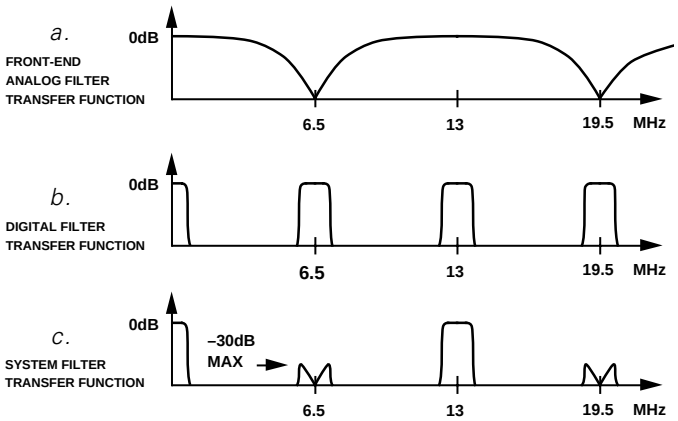

Figure 11. Switched Capacitor Input

SIGMA-DELTA ADC

The AD7002 receive channels employ a sigma-delta conversion technique that provides a high resolution 12-bit output for both I and Q channels, with system filtering being implemented on-chip.

The output of the switched capacitor filter is continuously sampled at 6.5 MHz (master clock/2) by a charge balanced modulator, and is converted into a digital pulse train whose duty cycle contains the digital information. Due to the high oversampling rate, which spreads the quantization noise from 0 MHz to 3.25 MHz ($F_S/2$), the noise energy contained in the band of interest is reduced (Figure 12a). To reduce the quantization still further, a high order modulator is employed to shape the noise spectrum, so that most of the noise energy is shifted out of the band of interest (Figure 12b).

The digital filter that follows the modulator removes the large out-of-band quantization noise (Figure 12c), while converting the digital pulse train into parallel 12-bit-wide binary data. The 12-bit I and Q data is made available, via a serial interface, in a variety of formats.

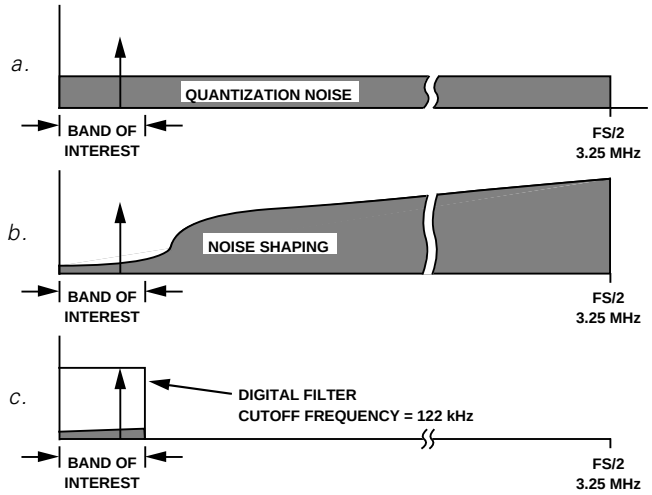

Figure 12. Sigma-Delta ADC

DIGITAL FILTER

The digital filters used in the AD7002 receive section carry out two important functions. First, they remove the out-of-band quantization noise that is shaped by the analog modulator. Second, they are also designed to perform system level filtering, providing excellent rejection of the neighboring channels.

Digital filtering has certain advantages over analog filtering. First, since digital filtering occurs after the A/D conversion process, it can remove noise injected during the conversion process. Analog filtering cannot do this. Second, the digital filter combines low passband ripple with a steep rolloff, while also maintaining a linear phase response. This is very difficult to achieve with analog filters.

Analog filtering can, however, remove noise superimposed on the analog signal before it reaches the ADC. Digital filtering cannot do this and noise peaks riding on signals near full scale have the potential to saturate the analog modulator, even though the average value of the signal is within limits. To alleviate this problem, the AD7002 has overrange headroom built into the sigma-delta modulator and digital filter which allows overrange excursions of 100 mV.

Filter Characteristics

The digital filter is a 288-tap FIR filter, clocked at half the master clock frequency. The frequency response is shown in Figure 14. The 3 dB point is at 122 kHz.

Due to the low pass nature of the receive filters, there is a settling time associated with step input functions. Output data will not be meaningful until all the digital filter taps have been loaded with data samples taken after the step change. Hence the AD7002 digital filters have a settling time of 44.7 µs ($288 \times 2\ t_1$).

When coming out of sleep, the digital filter taps are reset. Hence data, initially generated by the digital filters, will not be correct. Not until all 288 taps have been loaded with meaningful data

from the analog modulator, will the output data be correct. The analog modulator, on coming out of sleep, will generate meaningful data after 21 master clock cycles.

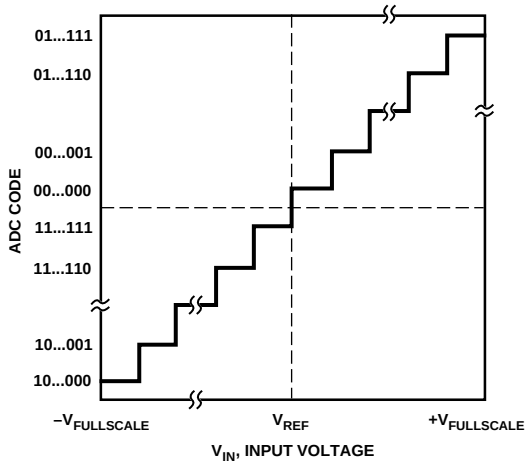

Figure 13. ADC Transfer Function for I and Q Receive Channels

Calibration

Included in the digital filter is a means by which receive signal offsets may be calibrated out. Calibration can be effected through the use of the CAL and MZERO pins.

Each channel of the digital low-pass filter section has an offset register. The offset register can be made to contain a value representing the dc offset of the preceding analog circuitry. In normal operation, the value stored in the offset register is subtracted from the filter output data before the data appears on the serial output pin. By so doing, the dc offset is cancelled.

In each channel the offset register is cleared (twos complement zero) when CAL is high and becomes loaded with the first digital filter result after CAL falls. This result will be a measure of the channel dc offset if the analog channel is switched to zero prior to CAL falling. Time must be provided for the analog circuitry and the digital filter to settle after the analog circuitry is switched to zero and before CAL falls. The offset register will then be loaded with the proper representation of the dc offset.

CAL must be high for more than 608 master clock cycles (CLK1, CLK2). If the analog channels are switched to zero coincident with CAL rising, this time is also sufficient to satisfy the settling time of the analog sigma-delta modulators and the digital filters. CAL may be held high for an unlimited time if convenient or necessary. Only the digital result following the fall of CAL will be loaded into each offset register. After CAL falls, normal operation resumes immediately.

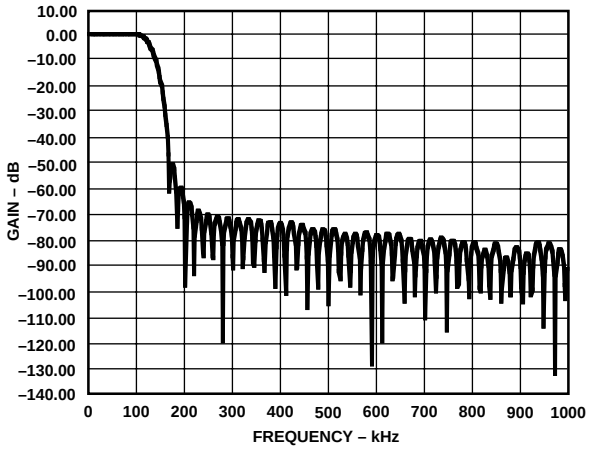

Figure 14. Digital Filter Frequency Response

The offset registers are static and retain their contents even during sleep mode (Rx $SLEEP_1$ and Rx $SLEEP_2$ high). They need only be updated if drifts in the analog dc offsets are experienced or expected. However, on initial application of power to the digital supply pins the offset registers may contain grossly incorrect values and, therefore, calibration must be activated at least once after power is applied even if the facility of calibration is not regularly used.

Table II. Truth Table for the MODE and RATE Pins

MODE	RATE	Data Format		Output Word Rate
0	0	IQ Data	I/$\overline{Q}$	270.8 kHz
0	1	IQ Data	I/$\overline{Q}$	541.7 kHz
1	0	I Data	Q Data	270.8 kHz
1	1	I Data	Q Data	541.7 kHz

The MZERO pin can be used to zero the sigma-delta modulators if calibration of preceding analog circuitry is not required. Each analog modulator has an internal analog multiplexer controlled by MZERO. With MZERO low, the modulator inputs are connected to the I Rx and Q Rx pins for normal operation. With MZERO high, both modulator inputs are connected to the V_{REF} pin, which is analog ground for the modulators. If calibration of external analog circuitry is desired, MZERO should be kept low during the calibration cycle.

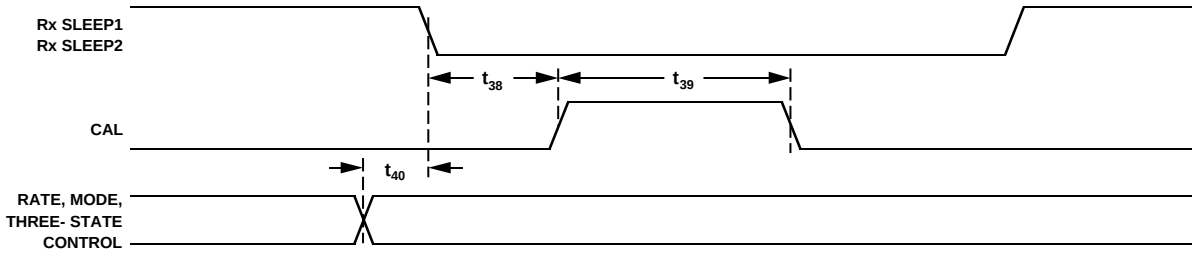

Figure 15. Calibration and Control Timing Diagram

The offset registers have enough resolution to hold the value of any dc offset between ±5 V. However, the performance of the sigma-delta modulators will degrade if full scale signals with more than 100 mV of offset are experienced. If large offsets are present, these can be calibrated out, but signal excursions from the offsets should be limited to keep the I Rx and Q Rx voltages within ±1.35 V of V_{REF}.

Receive Section Digital Interface

A flexible serial interface is provided for the AD7002 receive section. Four basic operating modes are available. Table II shows the truth table for the different serial modes available. The MODE pin determines whether the I and Q serial data is made available on two separate pins (MODE 1) or combined onto a single output pin (MODE 0). The RATE pin determines whether I and Q receive data is provided at 541.7 kHz (RATE 1) or at 270.8 kHz (RATE 0).

When the receive section is put into sleep mode, by bringing Rx $SLEEP_1$ and Rx $SLEEP_2$ high, the receive interface will complete the current IQ cycle before entering into a low power sleep mode.

MODE 0 RATE I Interface

The timing diagram for the MODE 0 RATE 1 receive interface is shown in Figure 16. It can be used to interface to DSP processors requiring only one serial port.

When using MODE 0, the serial data is made available on the Rx DATA pin, with the I/$\overline{Q}$ pin indicating whether the 12-bit word being clocked out is an I sample or a Q sample. Although the I data is clocked out before the Q data, internally both samples are processed together. RATE 1 selects an output word rate of 541.7 kHz, which is equal to the master clock (CLK1, CLK2) divided by 24.

When the receive section is brought out of sleep mode, by bringing Rx $SLEEP_1$ and Rx $SLEEP_2$ low, (after 32 master clock cycles) the Rx CLK output will continuously shift out I and Q data, always beginning with I data. Rx SYNC provides a framing signal used to indicate the beginning of an I or Q, 12-bit data word that is valid on the next falling edge of Rx CLK. On coming out of sleep, Rx SYNC goes high one clock cycle before the beginning of I data, and subsequently goes high in the same clock cycle as the last bit of each 12-bit word (both I and Q). Rx DATA is valid on the falling edge of Rx CLK and is clocked out MSB first, with the I/$\overline{Q}$ pin indicating whether Rx DATA is I data or Q data.

MODE 0 RATE 0 Interface

Figure 17 shows the receive timing diagram when MODE 0, RATE 0 is selected. Again I and Q data are shifted out on the Rx DATA pin, but here the output word rate is reduced to 270.8 kHz, this being equal to master clock (CLK1, CLK2) divided by 48.

Once the receive section is brought out of sleep mode, (after 56 master clock cycles) the Rx CLK output becomes active and generates an Rx SYNC framing pulse on the first Rx CLK. This is followed by 12 continuous clock cycles during which the I data is shifted out on the Rx DATA pin. Following this the Rx CLK remains high for 11 master clock cycles before clocking out the Q data in exactly the same manner.

Rx DATA is valid on the falling edge of Rx CLK with the I/$\overline{Q}$ pin indicating whether Rx DATA is I data or Q data.

MODE 1 RATE I Interface

Figure 18 shows the timing for MODE 1 RATE 1 receive digital interface. MODE 1 RATE 1 gives an output word rate of 541.7 kHz, but I and Q data are transferred on separate pins. I data is shifted out on Rx DATA (IDATA) pin and Q data is shifted out on the I/$\overline{Q}$ (QDATA) pin. RATE 1 selects an output word rate of 541.7 kHz (this is equal to the master clock divided by 24).

When the receive section is brought out of sleep mode, by bringing Rx $SLEEP_1$ and Rx $SLEEP_2$ low (after 32 master clock cycles), the Rx CLK output will continuously shift out I and Q data, on separate pins. Rx SYNC provides a framing signal used to indicate the beginning of an I or Q, 12-bit data word that is valid on the next falling edge of Rx CLK. On coming out of sleep, Rx SYNC goes high one clock cycle before the beginning of I data, and subsequently goes high in the same clock cycle as the I and Q LSBs. It takes 24 Rx CLKs (excluding the first framing pulse) to complete a single IQ cycle. IDATA and QDATA are valid on the falling edge of Rx CLK and are clocked out MSB first.

MODE I RATE 0 Interface

Figure 19 shows the receive timing diagram when MODE 1 RATE 0 is selected. MODE 1 RATE 0, again I and Q data are transferred on separate pins. I data is shifted out on Rx DATA (IDATA) pin and Q data is shifted out on the I/$\overline{Q}$ (QDATA) pin. The output word rate is reduced to 270.8 kHz, this equal to master clock (CLK1, CLK2) divided by 48.

Once the receive section is brought out of sleep mode, and after 56 master clock cycles, the Rx CLK output becomes active and generates an Rx SYNC framing pulse on the first Rx CLK. This is followed by 12 continuous clock cycles during which both the I and Q data is shifted out on IDATA and QDATA pins. Following this the Rx CLK remains high for 22 master clock cycles before clocking out the next IQ data pair.

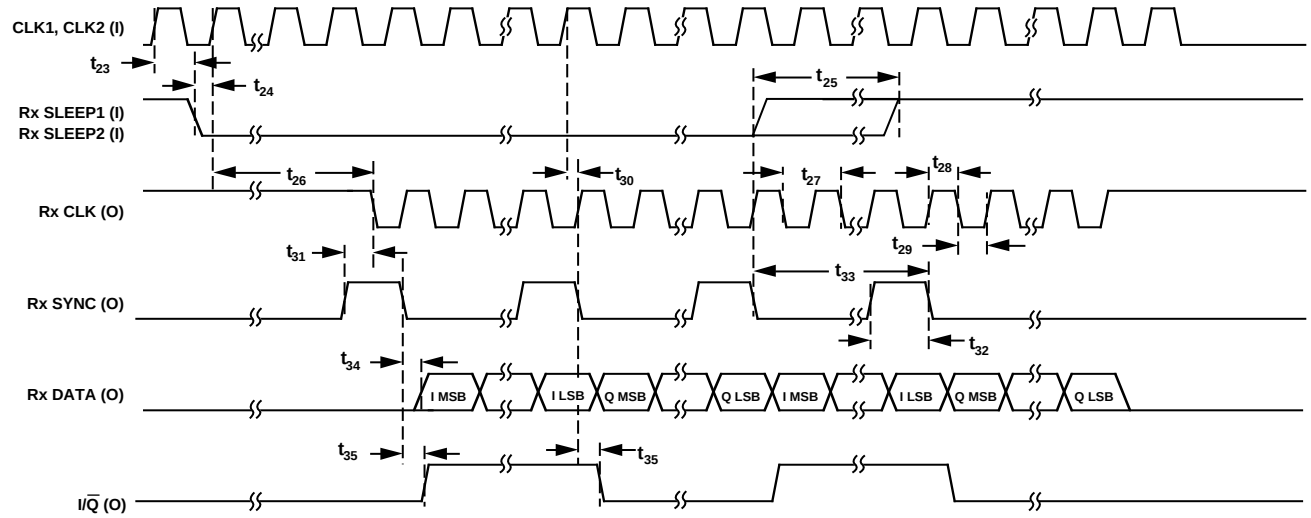

NOTE: (I) = DIGITAL INPUT; (O) = DIGITAL OUTPUT

Figure 16. MODE 0 RATE 1 Receive Timing

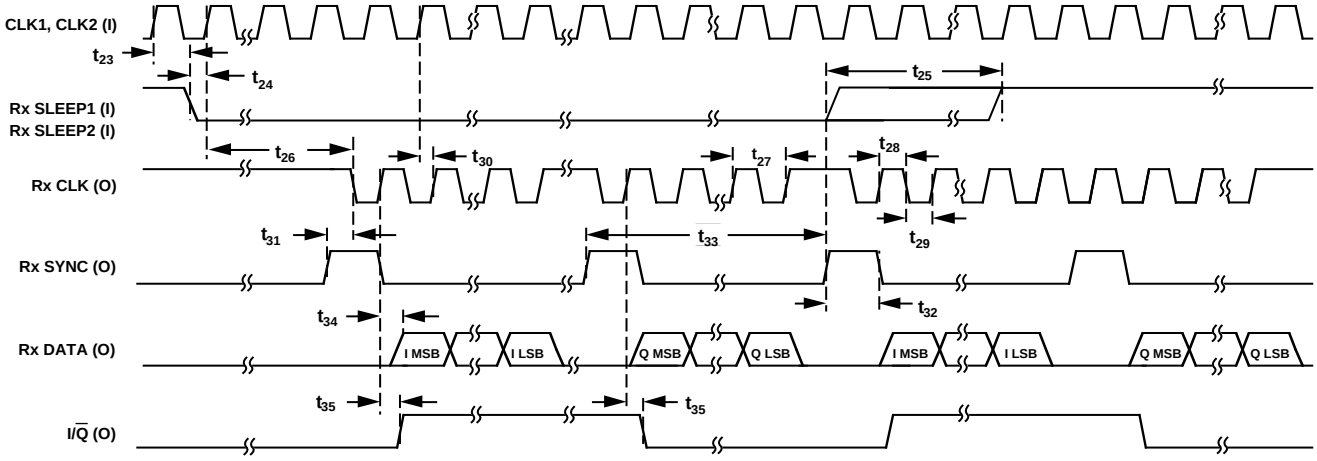

NOTE: (I) = DIGITAL INPUT; (O) = DIGITAL OUTPUT

Figure 17. MODE 0 RATE 0 Receive Timing

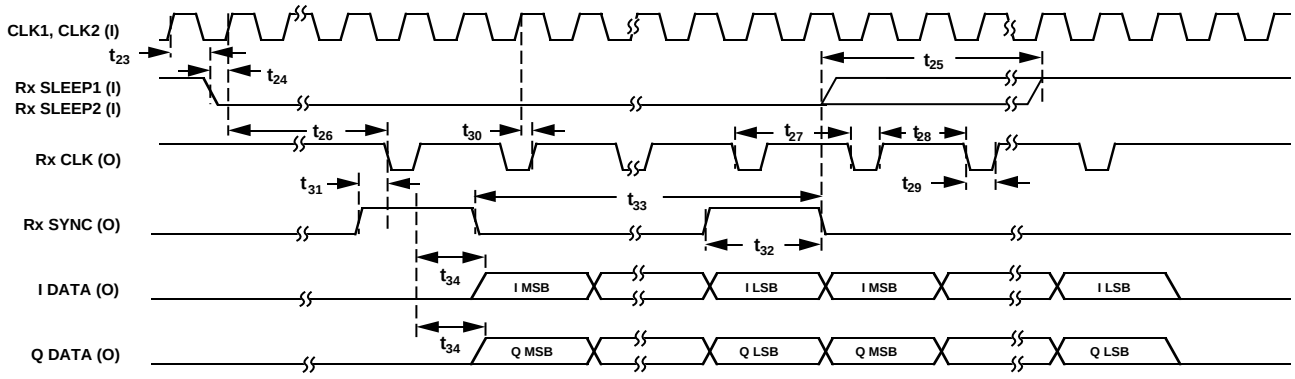

NOTE: (I) = DIGITAL INPUT; (O) = DIGITAL OUTPUT

Figure 18. MODE 1 RATE 1 Receive Timing

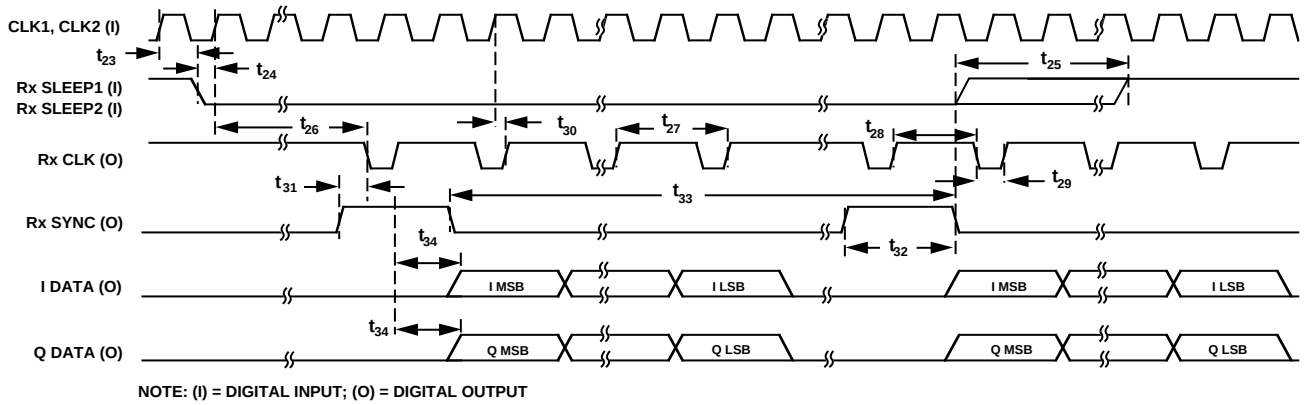

Figure 19. MODE 1 RATE 0 Receive Timing

AUXILIARY DACS

Three auxiliary DACs are provided for extra control functions such as automatic gain control, automatic frequency control or for ramping up/down the transmit power amplifiers during the beginning/end of a transmit burst. The three auxiliary DACs, AUX DAC1, AUX DAC2 and AUX DAC3, have resolutions of 9-, 10- and 8-bits, respectively. In addition to the three auxiliary DACs, the auxiliary section contains a digital output flag (AUX FLAG) with three-state control. Communication and sleep control of the auxiliary section is totally independent of either the transmit or receive sections.

The AD7002 AUX DACs are voltage mode DACs, consisting of R–2R ladder networks (Figure 20 shows AUX DAC1 architecture), constructed from highly stable thin-films resistors and high speed single pole, double throw switches. This design architecture leads to very low DAC current during normal operation. However, the AUX DACs have a high output impedance (typical 8 kΩ) and hence require external buffering. The AUX DACs have an output voltage range of 0 V to V_{REF} – 1 LSB. Each AUX DAC can be individually entered into low-power sleep mode, simply by loading all ones or all zeros to that particular AUX DAC. This does not affect the normal operation of AUX DACs, as either of these two codes (all 0s = 0 µA, all 1s = 50 µA typical) represent the operating points for lowest power consumption.

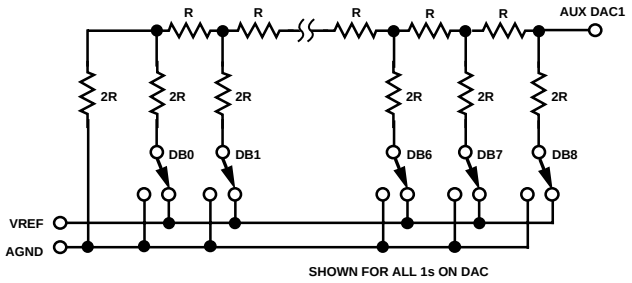

Figure 20. Auxiliary DAC Structure

The digital AUX FLAG output is available for any external logic control that may be required. For instance, the AUX FLAG could be used to control the Tx SLEEP pin, turning on the transmit section prior to ramping up (using one of AUX DACs) the RF amplifiers.

AUX DAC DIGITAL INTERFACE

Communication with the auxiliary section is accomplished via a three-pin serial interface, as the timing diagram in Figure 22 illustrates. While AUX LATCH is low, data is clocked into a 16-bit shift register via the AUX DATA and AUX CLK pins. AUX DATA is clocked on the falling edge of AUX CLK, MSB first. The 16-bit shift register is organized as a data field (DB0–DB9) and as a control field (DB10–DB15). The data field is 8-, 9- or 10-bits wide, depending on the AUX DAC being loaded. The control field indicates which AUX DACs are being loaded and also determines the state of the AUX FLAG pin. When the shift register has been loaded, AUX LATCH is brought high to update the selected AUX DACs and the AUX FLAG pin. The control bits are active high, and since a control bit has been assigned to each AUX DAC, this facilitates the simultaneous loading of more than one AUX DAC (with the same data). DB10, DB11 and DB12 selected AUX DAC3, AUX DAC1 and AUX DAC2 respectively, and DBlS determines the logic state of AUX FLAG while DB14 determines whether the three-state driver is enabled.

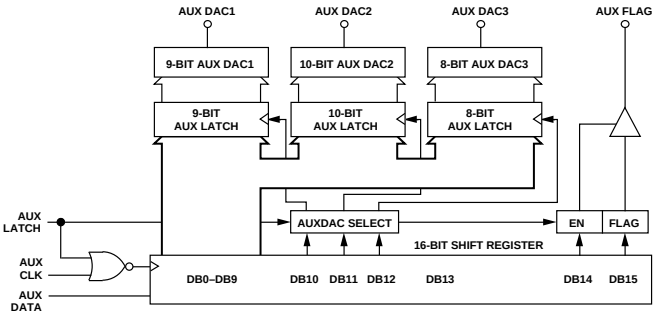

Figure 21. Auxiliary Section Serial Interface

VOLTAGE REFERENCE

The AD7002 contains an on-chip bandgap reference that provides a low noise, temperature compensated reference to the IQ transmit DACs and the IQ receive ADCs. The reference is also made available on the REFOUT pin and can be used to bias other analog circuitry in the IF section.

When both the transmit section and the receive section are in sleep mode (Tx SLEEP and Rx SLEEP asserted), the reference output buffer is also powered down by approximately 80% compatible crystal.

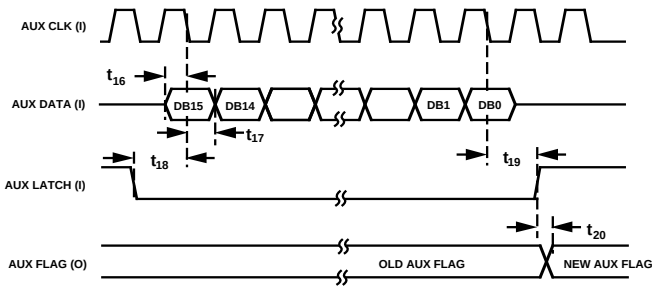

Figure 22. Auxiliary DAC Timing Diagram

PIN FUNCTION DESCRIPTIONS

PQFP Pin Number	Mnemonic	Function
POWER SUPPLY		
37	AV_{DD}	Positive power supply for analog section. This is +5 V ± 10%.
38	AGND	Analog ground.
4, 15	DV_{DD}	Positive power supply for digital section. This is +5 V ± 10%.
5, 16	DGND	Digital ground.
ANALOG SIGNAL AND REFERENCE		
41	I Tx	Analog output for the I (In-Phase) channel. This output comes from a 10-bit DAC and is filtered by a Bessel low pass filter. The 10-bit DAC is loaded with I data, which is generated by the GMSK modulator.
39	Q Tx	Analog output for the Q (Quadrature) channel. This output comes from a 10-bit DAC and is filtered by a Bessel low pass filter. The 10-bit DAC is loaded with Q data, which is generated by the GMSK modulator.
44	I Rx	Analog input for I receive channel.
42	Q Rx	Analog input for Q receive channel.
34	AUX DAC1	Analog output voltage from the 9-bit auxiliary DAC. This is a voltage mode DAC with a high output impedance and hence should be buffered if used to drive moderate impedance loads.
36	AUX DAC2	Analog output voltage from the 10-bit auxiliary DAC. This is a voltage mode DAC with a high output impedance and hence should be buffered if used to drive moderate impedance loads.
35	AUX DAC3	Analog output voltage from the 8-bit auxiliary DAC. This is a voltage mode DAC with a high output impedance and hence should be buffered if used to drive moderate impedance loads.
40	REFOUT	Reference output; this is 2.48 volts nominal.
TRANSMIT INTERFACE AND CONTROL		
7, 11	CLK1, CLK2	Master clock inputs for both the transmit and receive sections. CLK1 and CLK2 must be externally hardwired together and driven from a 13 MHz TTL compatible crystal.
3	Tx CLK	Clock output from the AD7002 which can be used to clock in the data for the transmit section.
2	Tx DATA	Data input for the transmit section, data is clocked on the falling edge of Tx CLK.
1	Tx SLEEP	Sleep control input for transmit section. When it is high, the transmit section goes into standby mode and draws minimal current.
RECEIVE INTERFACE AND CONTROL		
13	MODE	Digital control input. When High (MODE 1), the I and Q outputs are on separate pins (QDATA and IDATA). When Low (MODE 0), I and Q are on the same pin (Rx DATA).
12	RATE	Digital control input. This determines whether the receive section interface operates at a word rate of 541.7 kHz or at a word rate of 270.8 kHz. When High (RATE 1), the output word rate is 541.7 kHz. When Low (RATE 0), the output word rate is 270.8 kHz.
18	Rx DATA (IDATA)	This is a dual function digital output. When the device is operating in MODE 0, the Rx DATA (both I and Q) is available at this pin. When the device is operating in MODE 1, only IDATA is available at this pin.

PQFP Pin Number	Mnemonic	Function
19	I/$\overline{Q}$ (QDATA)	This is a dual function digital output. When the device is operating in MODE 0, it indicates whether IDATA or QDATA is present on Rx DATA pin. In MODE 1, QDATA is available at this pin.
20	Rx SYNC	Synchronization output for framing I and Q data at the receive interface.
21	Rx CLK	Output clock for the receive section interface.
22	THREE-STATE CONTROL	This digital input controls the output three-state drivers on the receive section interface. When it is High, the outputs are enabled. When Low, they are in high impedance.
23	CAL	Calibration control pin for digital filter section. When brought high, for a minimum of 608 master clock cycles, the receive section enters a calibration cycle. Where I and Q offset registers are updated, when the CAL pin is brought low again, with offset values which are subtracted out from subsequent ADC conversions. CAL should remain Low during normal operation.
29	MZERO	Digital control input. When high the analog modulator input is internally grounded (i.e., tied to V_{REF}). MZERO, in conjunction with CAL, allows on-chip offsets to be calibrated out. Low for normal operation.
27, 24	Rx $SLEEP_1$, Rx $SLEEP_2$	Power-down control inputs for receive section. When high, the receive section goes into standby mode and draws minimal current. Rx $SLEEP_1$ and Rx $SLEEP_2$ must be externally hardwired together for normal device operation.
AUXILIARY INTERFACE AND CONTROL		
32	AUX LATCH	Synchronization input for the auxiliary DACs' shift register and AUX OUT.
31	AUX CLK	Clock input for the auxiliary DACs' 16-bit shift register. AUX DATA is latched on the falling edge of AUX CLK while AUX LATCH is low.
30	AUX DATA	Data input for the AUX DACs and the AUX FLAG serial interface.
33	AUX FLAG	Digital output flag, this can be used as a digital control output and is controlled from the auxiliary serial interface.
TEST		
8, 26	Test l, Test 2	Test pins for factory use only. These pins should be left unconnected and not used as routes for other circuit signals.
14, 43	Test 3, Test 4	Test pins. These must be tied to ground for normal device operation.

OUTLINE DIMENSIONS

Dimensions shown in inches and (mm).

Plastic Quad Flatpack Package (S-44)

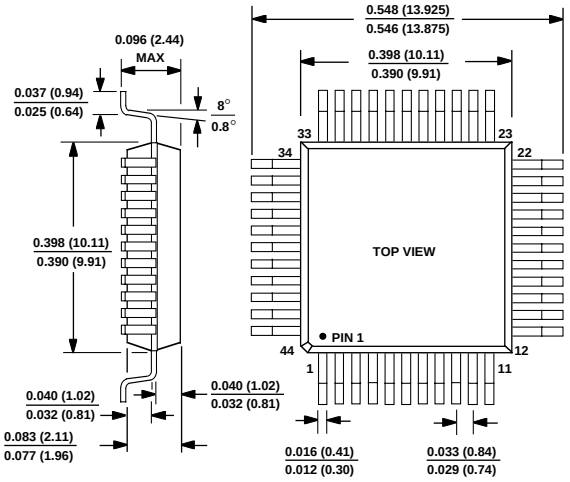

C1700b–0–6/97

PRINTED IN U.S.A.

О компании

ООО "ТрейдЭлектроникс" - это оперативные поставки широкого спектра электронных компонентов отечественного и импортного производства напрямую от производителей и с крупнейших мировых складов. Реализуемая нашей компанией продукция насчитывает более полумиллиона наименований.

Благодаря этому наша компания предлагает к поставке практически не ограниченный ассортимент компонентов как оптовыми, мелкооптовыми партиями, так и в розницу.

Наличие собственной эффективной системы логистики обеспечивает надежную поставку продукции по конкурентным ценам в точно указанные сроки.

Срок поставки со стоков в **Европе и Америке – от 3 до 14 дней.**

Срок поставки из **Азии – от 10 дней.**

Благодаря развитой сети поставщиков, помогаем в поиске и приобретении экзотичных или снятых с производства компонентов.

Предоставляем спец цены на элементы для создания инженерных сэмплов.

Упорный труд, качественный результат дают нам право быть уверенными в себе и надежными для наших клиентов.

Наша компания это:

- Гарантия качества поставляемой продукции
- Широкий ассортимент
- Минимальные сроки поставок
- Техническая поддержка
- Подбор комплектации
- Индивидуальный подход
- Гибкое ценообразование

Наша организация особенно сильна в поставках модулей, микросхем, пассивных компонентов, ксайленсах (XC), EPF, EPM и силовой электроники.

Большой выбор предлагаемой продукции, различные виды оплаты и доставки, позволят Вам сэкономить время и получить максимум выгоды от сотрудничества с нами!

Trade Electronics.ru

гарантия бесперебойности производства и качества выпускаемой продукции

Перечень производителей, продукцию которых мы поставляем на российский рынок

AMD
ANALOG DEVICES
BOURNS
Coilcraft
élantec Semiconductor, Inc.
HARRIS
Infineon
JRC
MICREL
MOTOROLA
nichicon
PHILIPS
ROHM
SGS-THOMSON
Sipex
TAIYO YUDEN
TOKO
ZILOG
Winbond
Allegro
ATMEL
BURR - BROWN
EXAR
HITACHI
intel
Lattice
muRata
OKI
QUALCOMM
SAMSUNG
SHARP
SONY
TDK
TOSHIBA
KYOCERA
ALTERA
AVX
CITILYST
CYPRESS
FAIRCHILD SEMICONDUCTOR
HOLTEK
International IOR Rectifier
LINEAR TECHNOLOGY
MITSUBISHI
National Semiconductor
ON Semiconductor
REALTEK
SANYO
SHINDENGEN
SGS
TECCOR
TUNDRA
XILINX
Amphenol
Bay Linear
CIRRUS LOGIC
DALLAS
FUJITSU
IDT
intersil
MAXIM
molex
NEC
Panasonic
RENESAS
SII
SIEMENS
ST
Texas Instruments
VISHAY
ZETEX SEMICONDUCTORS

Trade Electronics.ru

гарантия бесперебойности производства и качества выпускаемой продукции

С удовольствием будем прорабатывать для Вас поставки всех необходимых компонентов по текущим запросам для скорейшего выявления групп элементов, по которым сотрудничество именно с нашей компанией будет для Вас максимально выгодным!

С уважением,

Менеджер отдела продаж ООО

«Трейд Электроникс»

Шишлаков Евгений

8 (495)668-30-28 доб 169

manager28@tradeelectronics.ru

http://www.tradeelectronics.ru/