GM66015

1.5A LOW DROPOUT PRECISION REGULATOR

Description

GM66015 series of positive adjustable and fixed regulators is designed to provide 1.5A output current with low dropout voltage performance. On-chip trimming adjusts the reference voltage with an accuracy of ±1% for adjustable, and ±2% for fixed output voltage versions. Besides the features mentioned, GM66015 works well in post regulators or micro-processor power supplies where low voltage operation and fast transient response are required. GM66015 includes over current protection and thermal shutdown protection as well.

GM66015 is available in TO-220, surface-mount TO-263, surface-mount TO252 and SOT223 packages.

Features

- **Adjustable or Fixed Output**
- **Output Current of 1.5A**
- **Low Dropout, 1.5V max at 1.5A Output Current**
- **0.04% Line Regulation**
- **0.2 % Load Regulation**
- **100% Thermal Limit Burn-In**
- **Fast Transient Response**
- **Pin to Pin Compatible with LT1086 series**

Applications

- **Post Regulators for Switching Supplies**
- **High Efficiency Linear Regulators**
- **Motherboards**

Typical Application Circuit

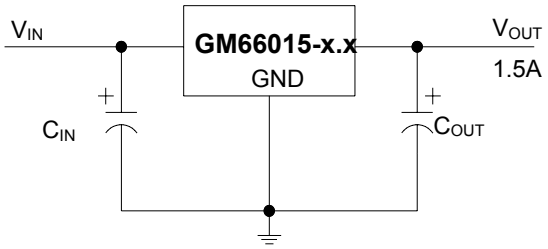

Fixed Output Voltage Version

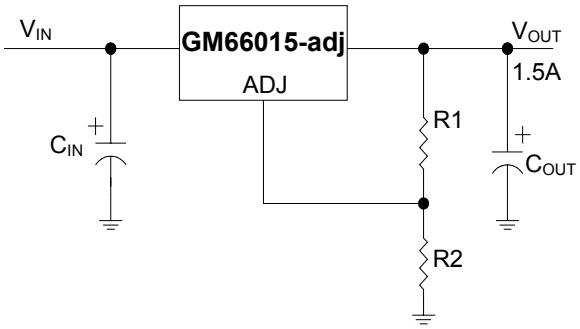

Adjustable Output Voltage Version

Marking Information and Pin Configurations (Top View) – Pb Free Product

SOT223

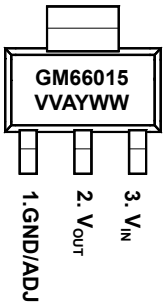

TO 252 (D-PAK)

TO 220

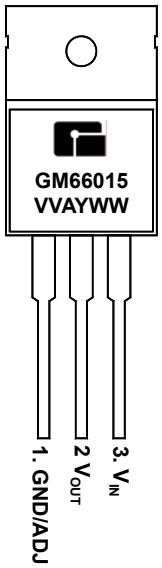

TO 263 (D^2-PAK)

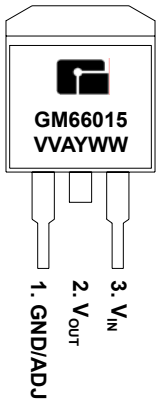

VV: Output Voltage Codes (05: 5.0V, …A: ADJ)
A: Assembly/Test Site Code
Y: Year
WW: Week

Marking Information and Pin Configurations (Top View) – Green Product

SOT223

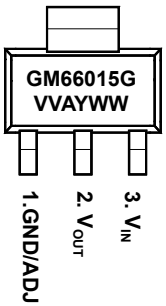

TO 252 (D-PAK)

TO 220

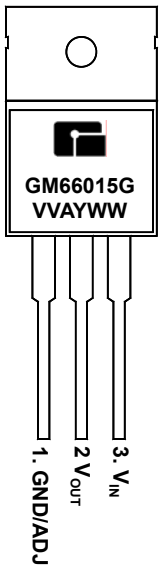

TO 263 (D^2-PAK)

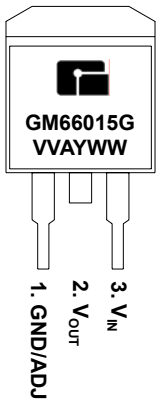

G: Green Product
VV: Output Voltage Codes (05: 5.0V, …A: ADJ)
A: Assembly/Test Site Code
Y: Year
WW: Week

Ordering Information – Pb Free Product

Ordering Number	V_{OUT}	Package	Shipping
GM66015-ATA3T	Adj	TO-263	50 Units/Tube
GM66015-ATA3R		TO-263	800 Units / Reel
GM66015-ATB3T		TO-220	50 Units/Tube
GM66015-ATC3T		TO-252	80 Units/Tube
GM66015-ATC3R		TO-252	2,500 Units / Reel
GM66015-AST3T		SOT-223	80 Units/Tube
GM66015-AST3R		SOT-223	2,500 Units / Reel
GM66015-1.8TA3T	1.8V	TO-263	50 Units/Tube
GM66015-1.8TA3R		TO-263	800 Units / Reel
GM66015-1.8TB3T		TO-220	50 Units/Tube
GM66015-1.8TC3T		TO-252	80 Units/Tube
GM66015-1.8TC3R		TO-252	2,500 Units / Reel
GM66015-1.8ST3T		SOT-223	80 Units/Tube
GM66015-1.8ST3R		SOT-223	2,500 Units / Reel
GM66015-2.5TA3T	2.5V	TO-263	50 Units/Tube
GM66015-2.5TA3R		TO-263	800 Units / Reel
GM66015-2.5TB3T		TO-220	50 Units/Tube
GM66015-2.5TC3T		TO-252	80 Units/Tube
GM66015-2.5TC3R		TO-252	2,500 Units / Reel
GM66015-2.5ST3T		SOT-223	80 Units/Tube
GM66015-2.5ST3R		SOT-223	2,500 Units / Reel
GM66015-3.3TA3T	3.3V	TO-263	50 Units/Tube
GM66015-3.3TA3R		TO-263	800 Units / Reel
GM66015-3.3TB3T		TO-220	50 Units/Tube
GM66015-3.3TC3T		TO-252	80 Units/Tube
GM66015-3.3TC3R		TO-252	2,500 Units / Reel
GM66015-3.3ST3T		SOT-223	80 Units/Tube
GM66015-3.3ST3R		SOT-223	2,500 Units / Reel
GM66015-5.0TA3T	5.0V	TO-263	50 Units/Tube
GM66015-5.0TA3R		TO-263	800 Units / Reel
GM66015-5.0TB3T		TO-220	50 Units/Tube
GM66015-5.0TC3T		TO-252	80 Units/Tube
GM66015-5.0TC3R		TO-252	2,500 Units / Reel
GM66015-5.0ST3T		SOT-223	80 Units/Tube
GM66015-5.0ST3R		SOT-223	2,500 Units / Reel

Ordering Information – Green Product

Ordering Number	V_{OUT}	Package	Shipping
GM66015-ATA3TG	Adj	TO-263	50 Units/Tube
GM66015-ATA3RG		TO-263	800 Units / Reel
GM66015-ATB3TG		TO-220	50 Units/Tube
GM66015-ATC3TG		TO-252	80 Units/Tube
GM66015-ATC3RG		TO-252	2,500 Units / Reel
GM66015-AST3TG		SOT-223	80 Units/Tube
GM66015-AST3RG		SOT-223	2,500 Units / Reel
GM66015-1.8TA3TG	1.8V	TO-263	50 Units/Tube
GM66015-1.8TA3RG		TO-263	800 Units / Reel
GM66015-1.8TB3TG		TO-220	50 Units/Tube
GM66015-1.8TC3TG		TO-252	80 Units/Tube
GM66015-1.8TC3RG		TO-252	2,500 Units / Reel
GM66015-1.8ST3TG		SOT-223	80 Units/Tube
GM66015-1.8ST3RG		SOT-223	2,500 Units / Reel
GM66015-2.5TA3TG	2.5V	TO-263	50 Units/Tube
GM66015-2.5TA3RG		TO-263	800 Units / Reel
GM66015-2.5TB3TG		TO-220	50 Units/Tube
GM66015-2.5TC3TG		TO-252	80 Units/Tube
GM66015-2.5TC3RG		TO-252	2,500 Units / Reel
GM66015-2.5ST3TG		SOT-223	80 Units/Tube
GM66015-2.5ST3RG		SOT-223	2,500 Units / Reel
GM66015-3.3TA3TG	3.3V	TO-263	50 Units/Tube
GM66015-3.3TA3RG		TO-263	800 Units / Reel
GM66015-3.3TB3TG		TO-220	50 Units/Tube
GM66015-3.3TC3TG		TO-252	80 Units/Tube
GM66015-3.3TC3RG		TO-252	2,500 Units / Reel
GM66015-3.3ST3TG		SOT-223	80 Units/Tube
GM66015-3.3ST3RG		SOT-223	2,500 Units / Reel
GM66015-5.0TA3TG	5.0V	TO-263	50 Units/Tube
GM66015-5.0TA3RG		TO-263	800 Units / Reel
GM66015-5.0TB3TG		TO-220	50 Units/Tube
GM66015-5.0TC3TG		TO-252	80 Units/Tube
GM66015-5.0TC3RG		TO-252	2,500 Units / Reel
GM66015-5.0ST3TG		SOT-223	80 Units/Tube
GM66015-5.0ST3RG		SOT-223	2,500 Units / Reel

Absolute Maximum Ratings

PARAMETER	SYMBOL	RATINGS	UNITS
Input Voltage	V_I	15	V
Power Dissipation	P_D	Internally Limited	W
Operating Junction Temperature	T_J	- 40 to 125	°C
Storage Temperature	T_{stg}	- 60 to 150	°C
Lead Temperature 1.6mm (1/6 inch) from case for 10 seconds		260	°C

Block Diagram

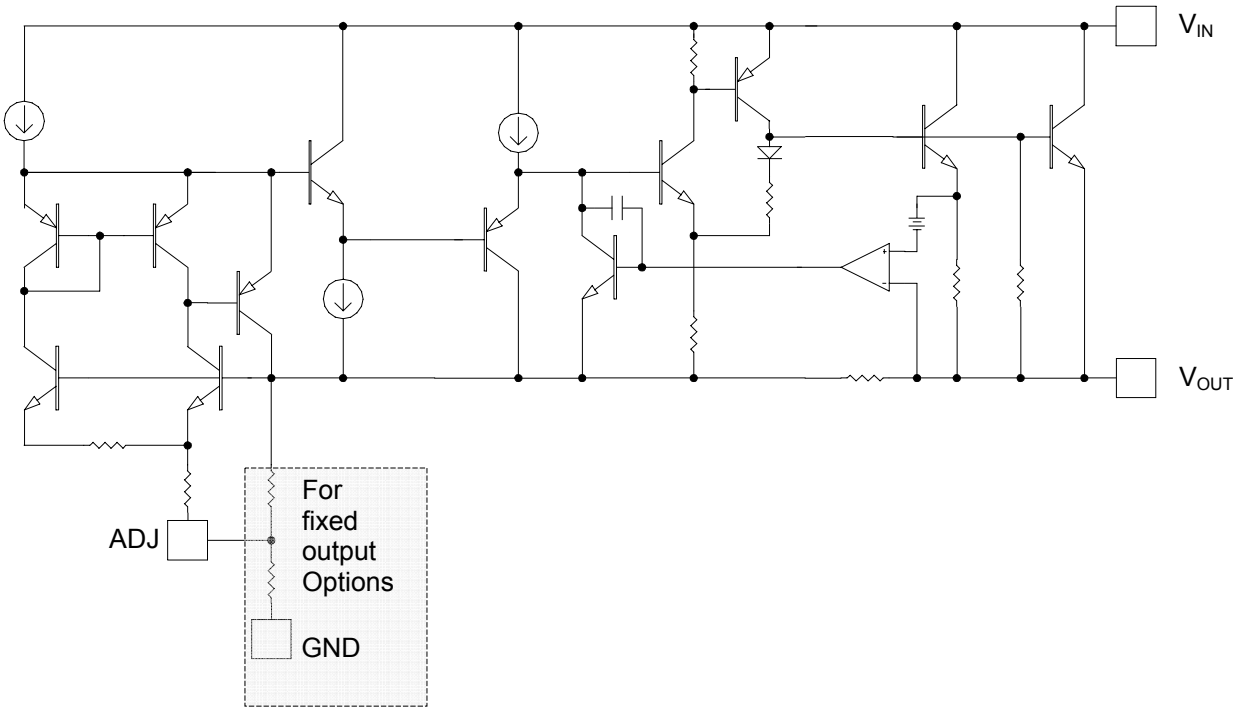

GM7805 Electrical Characteristics (T_j = 25°C, Inless otherwise noted)

Parameter		Symbol	Test Condition	Min	Typ	Max	Unit
Reference Voltage	GM66015-A	V_{REF}	I_{OUT} = 10mA, V_{IN} – V_{OUT} = 1.5V	1.238	1.250	1.262	V
			10mA ≤ I_{OUT} ≤ 1.5A, 3.3V ≤V_{IN} ≤7V	1.225	1.250	1.275	
Output Voltage	GM66015-1.8	V_O	I_{OUT} = 10mA, V_{IN} = 3.3V	1.782	1.800	1.818	V
			10mA ≤ I_{OUT} ≤ 1.5A, 3.3V ≤V_{IN} ≤7V	1.764	1.800	1.836	
	GM66015-2.5		I_{OUT} = 10mA, V_{IN} = 4V	2.475	2.500	2.525	
			10mA ≤ I_{OUT} ≤ 1.5A, 4V ≤V_{IN} ≤7V	2.460	2.500	2.540	
	GM66015-3.3		I_{OUT} = 10mA, V_{IN} = 4.8V	3.267	3.300	3.333	
			10mA ≤ I_{OUT} ≤ 1.5A, 4.8V ≤V_{IN} ≤7V	3.247	3.300	3.353	
	GM66015-5.0		I_{OUT} = 10mA, V_{IN} = 6.5V	4.950	5.000	5.050	
			10mA ≤ I_{OUT} ≤ 1.5A, 6.5V ≤V_{IN} ≤7V	4.920	5.000	5.080	
Line Regulation	GM66015-A	ΔV_{OI}	I_{OUT} = 10mA		0.04	0.20	%
	GM66015-1.8		I_{OUT} = 10mA, 3.3V ≤V_{IN} ≤7V				
	GM66015-2.5		I_{OUT} = 10mA, 4V ≤V_{IN} ≤7V				
	GM66015-3.3		I_{OUT} = 10mA, 4.8V ≤V_{IN} ≤7V				
	GM66015-5.0		I_{OUT} = 10mA, 6.5V ≤V_{IN} ≤7V				
Load Regulation	GM66015-A	ΔV_{OL}	V_{IN} –V_{OUT} =1.5V,10mA ≤ I_{OUT} ≤ 1.5A		0.08	0.40	%
	GM66015-1.8		V_{IN} = 3.3V, 10mA ≤ I_{OUT} ≤ 1.5A				
	GM66015-2.5		V_{IN} = 4.0V, 10mA ≤ I_{OUT} ≤ 1.5A				
	GM66015-3.3		V_{IN} = 4,8V, 10mA ≤ I_{OUT} ≤ 1.5A				
	GM66015-5.0		V_{IN} = 6.5V, 10mA ≤ I_{OUT} ≤ 1.5A				
Dropout Voltage		V_D	I_{OUT} = 1.5A		1.15	1.3	V
Current Limit		I_{CL}	V_{IN} –V_{OUT} =3V	1.5	2.3		A
Minimum Load Current		$I_{O(MIN)}$	V_{IN} = 5.0V		1.7	5.0	mA
Quiescent Current	GM66015-1.8	I_Q	V_{IN} = 3.3V, 10mA ≤ I_{OUT} ≤ 1.5A		5	13	mA
	GM66015-2.5		V_{IN} = 4.0V, 10mA ≤ I_{OUT} ≤ 1.5A				
	GM66015-3.3		V_{IN} = 4,8V, 10mA ≤ I_{OUT} ≤ 1.5A				
	GM66015-5.0		V_{IN} = 6.5V, 10mA ≤ I_{OUT} ≤ 1.5A				
Adjust Pin Current	GM66015-A	I_{ADJ}	I_{OUT} = 10mA, 2.75V ≤V_{IN} ≤7V		50	120	μA
Thermal Regulation			T_A = 25°C , 30ms Pulse		0.003		%/W
Ripple Rejection		R_A	I_{OUT} = 750mA, V_{IN} – V_{OUT} = 1.5V	60	80		dB

Application Information

GM66015 series linear regulators provide fixed and adjustable output voltages at currents up to 5.0A. These regulators are protected against over-current conditions and include thermal shutdown protection. The GM66015 has a composite PNP-NPN output transistor and require an output capacitor for stability.

A detailed procedure for selecting this capacitor is as below:

Stability Considerations

The output compensation capacitor helps to determine three main characteristics of a linear regulator's performance: start-up delay, load transient response, and loop stability. The capacitor value and type is based on cost, availability, size, and temperature constraints. A tantalum or aluminum electrolytic capacitor is preferred, as a film or ceramic capacitor with almost zero ESR can cause instability. An aluminum electrolytic capacitor is the least expensive type. But when the circuit operates at low temperatures, both the value and ESR of the capacitor will vary widely. For optimum performance over the full operating temperature range, a tantalum capacitor is the best. A 22μF tantalum capacitor will work fine in most applications. But with high current regulators, such as GM66015 higher capacitance values will improve the transient response and stability. Most applications for Gm66015 involve large changes in load current, so the output capacitor must supply instantaneous load current. The ESR of the output capacitor causes an immediate drop in output voltage given by:

$$V = I \times ESR$$

In microprocessor applications an output capacitor network of several tantalum and ceramic capacitors in parallel is commonly used. This reduces overall ESR and minimizes the instantaneous output voltage drop under transient load conditions. The output capacitor network should be placed as close to the load as possible for the best results.

Protection Diodes

When large external capacitors are used with most linear regulators, it is wise to add protection diodes. If the input voltage of the regulator is shorted, the output capacitor will discharge into the output of the regulator. The discharge current depends on the value of capacitor, output voltage, and rate at which V_{IN} drops.

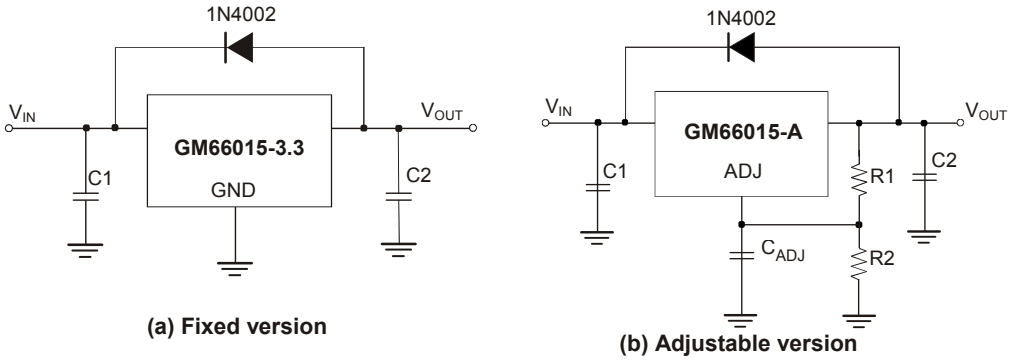

(a) Fixed version

(b) Adjustable version

Figure 1. Protection Diode Scheme for large Output Capacitors

For GM66015, the discharge path is through a large junction, and protection diodes are normally not needed. However, if the regulator is used with large output capacitance values and the input voltage is instantaneously shorted to ground, damage can occur. In this case, a diode connected as shown above in Figure 1 is recommended.

Output Voltage Sensing

GM66015 series is a three-terminal regulator, so it cannot provide true remote load sensing. Load regulation is limited by the resistance of the conductors connecting the regulator to the load. For best results, GM66015 should be connected as shown 1n F1gure 2.

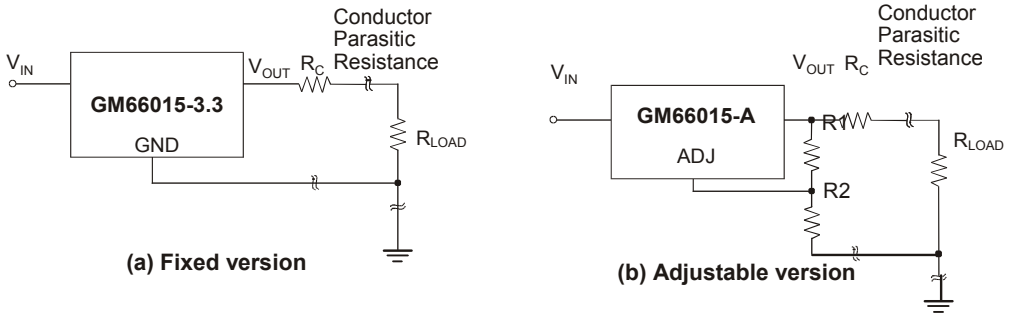

Figure 2. Conductor Parasitic Resistance Effects are Minimized by this Grounding Scheme.

Calculating Power Dissipation and Heat Sink Requirements

GM66015 series include thermal shutdown and current limit circuitry to protect the devices. However, high power regulators normally operate at high junction temperatures so it is important to calculate the power dissipation and junction temperatures accurately to be sure to use an adequate heat sink. The case is connected to V_{OUT} on GM66015, so electrical isolation may be required for some applicat1ons. Thermal compound should always be used with high current regulators like GM66015.

The thermal characteristics of an IC depend on four factors:

1. Maximum Ambient Temperature T_A (°C)
2. Power Dissipation P_D (Watts)
3. Maximum Junction Temperature T_J (°C)
4. Thermal Resistance Junction to amb1ent θ_{JA}

The relationship of these four factors is expressed by equation (1):

$$T_J = T_A + P_D \times \theta_{JA}$$

Maximum ambient temperature and power dissipation are determ1ned by the design while the maximum junction temperature and thermal resistance depend on the manufacturer and the package type.

The maximum power dissipation for a regulator is expressed by equation (2):

$$P_{D(MAX)} = (V_{IN(MAX)} - V_{OUT(MIN)}) \times I_{OUT(MIN)} + V_{IN(MIN)} \times I_Q$$

where:

$V_{IN(MAX)}$ is the maximum input voltage,
$V_{OUT(MIN)}$ is the minimum output voltage,
$I_{OUT(MAX)}$ is the maximum output current
I_Q is the max1mum quiescent current at $I_{OUT(MAX)}$.

A heat sink effect1vely increases the surface area of the package to improve the flow of heat away from the IC into the air. Each material in the heat flow path between the IC and the environment has a thermal resistance. Like series electrical resistances, these resistance are summed to determine θ_{JA}, the total thermal resistance between the junction and the air. This is expressed by equation (3):

$$\theta_{JA} = \theta_{JC} + \theta_{CS} + \theta_{SA}$$

where:

θ_{JC} is the thermal resistance of Junction to Case,
θ_{CS} is the thermal resistance of Case to Heat Sink,
θ_{SA} is the thermal resistance of Heat Sink to Ambient air.

The value for θ_{JA} is calculated using equation (3) and the result can be substituted in equation (1). The value for θ_{CS} is 3.5°C/W for a given package typed based on an average d1ie size. For a high current regulator such as GM66015, the majority of the heat is generated in the power transistor sect1on.

Package Outline Dimensions – TO263

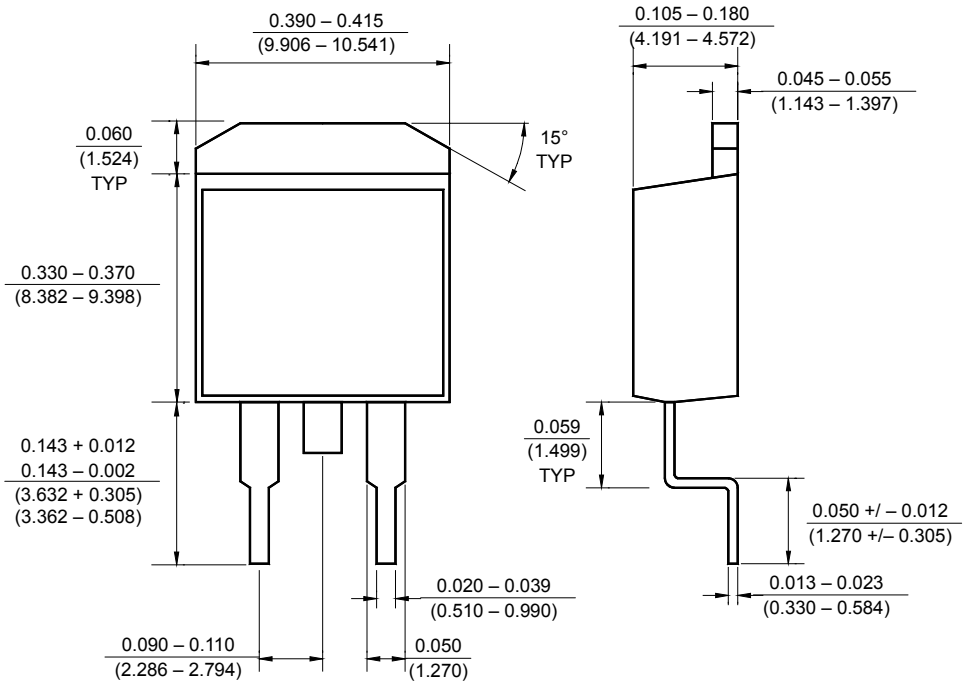

Package Outline Dimensions – TO252

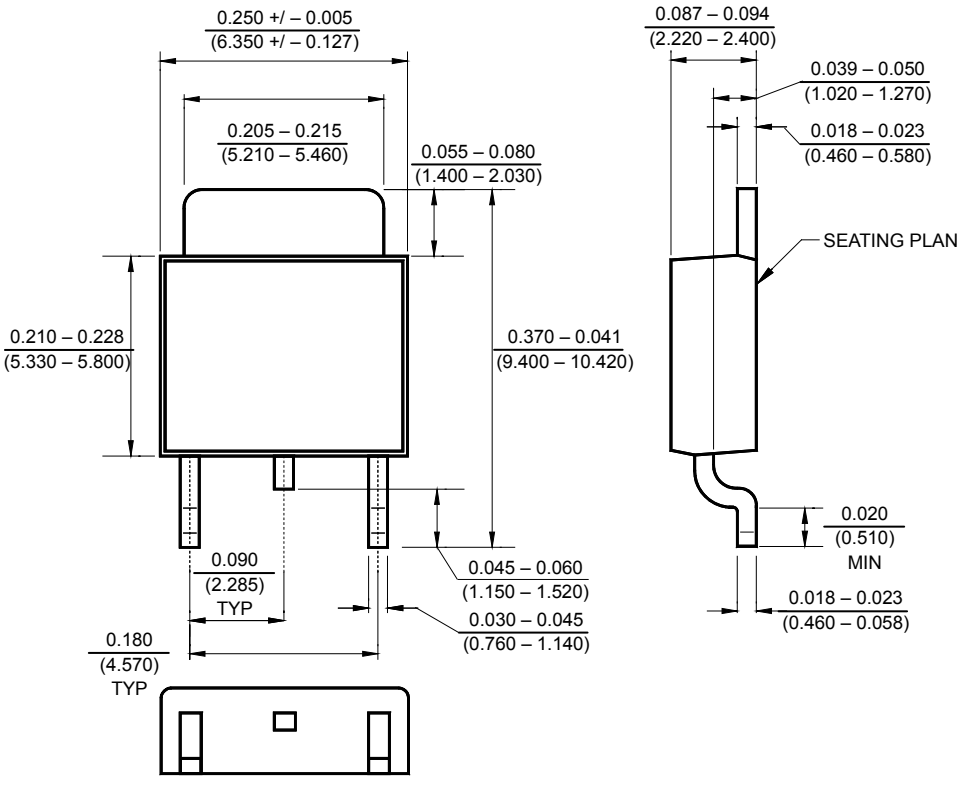

Package Outline Dimensions – SOT223

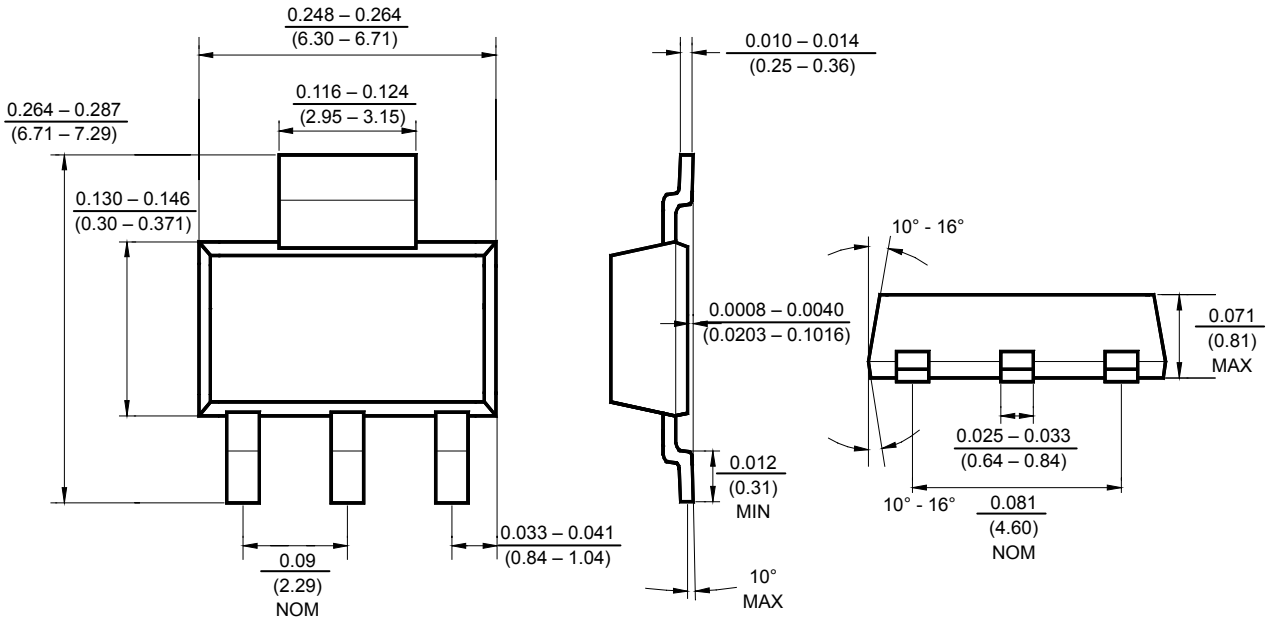

Ordering Number

GM	66015	-1.8	TA3	R	G
APM Gamma Micro	Circuit Type	Output Voltages	Package Type	Shipping Type	
		A: ADJ 1.8: 1.8V 2.5: 2.5V 3.3: 3.3V 5.0: 5.0V	TA3: TO263 TB3: TO220 TC3: TO252 ST3: SOT223	T: Tube R: Tape & Reel	Blank: Pb Free G: Green

Note:

Pb-free products:

- RoHS compliant and compatible with the current require-ments of IPC/JEDEC J-STD-020.
- Suitable for use in Pb-free soldering processes with 100% matte tin (Sn) plating.

Green products:

- Lead-free (RoHS compliant)
- Halogen free(Br or Cl does not exceed 900ppm by weight in homogeneous material and total of Br and Cl does not exceed 1500ppm by weight)

TradeElectronics.ru

гарантия бесперебойности производства и качества выпускаемой продукции

О компании

ООО "ТрейдЭлектроникс" - это оперативные поставки широкого спектра электронных компонентов отечественного и импортного производства напрямую от производителей и с крупнейших мировых складов. Реализуемая нашей компанией продукция насчитывает более полумиллиона наименований.

Благодаря этому наша компания предлагает к поставке практически не ограниченный ассортимент компонентов как оптовыми, мелкооптовыми партиями, так и в розницу.

Наличие собственной эффективной системы логистики обеспечивает надежную поставку продукции по конкурентным ценам в точно указанные сроки.

Срок поставки со стоков в **Европе и Америке – от 3 до 14 дней.**

Срок поставки из **Азии – от 10 дней.**

Благодаря развитой сети поставщиков, помогаем в поиске и приобретении экзотичных или снятых с производства компонентов.

Предоставляем спец цены на элементы для создания инженерных сэмплов.

Упорный труд, качественный результат дают нам право быть уверенными в себе и надежными для наших клиентов.

Наша компания это:

- Гарантия качества поставляемой продукции
- Широкий ассортимент
- Минимальные сроки поставок
- Техническая поддержка
- Подбор комплектации
- Индивидуальный подход
- Гибкое ценообразование

Наша организация особенно сильна в поставках модулей, микросхем, пассивных компонентов, ксайленсах (XC), EPF, EPM и силовой электроники.

Большой выбор предлагаемой продукции, различные виды оплаты и доставки, позволят Вам сэкономить время и получить максимум выгоды от сотрудничества с нами!

Trade Electronics.ru

гарантия бесперебойности производства и качества выпускаемой продукции

Перечень производителей, продукцию которых мы поставляем на российский рынок

Trade Electronics.ru

гарантия бесперебойности производства и качества выпускаемой продукции

С удовольствием будем прорабатывать для Вас поставки всех необходимых компонентов по текущим запросам для скорейшего выявления групп элементов, по которым сотрудничество именно с нашей компанией будет для Вас максимально выгодным!

С уважением,

Менеджер отдела продаж ООО

«Трейд Электроникс»

Шишлаков Евгений

8 (495)668-30-28 доб 169

manager28@tradeelectronics.ru

http://www.tradeelectronics.ru/