6000 Series Buccaneer®

bulgin
a brand of Elektron Technology

Robust, instant connections for harsh environments

The all plastic construction 6000 Series Buccaneer - circular connectors that combine the ease of use of a push/pull coupling mechanism with proven environmental sealing for signal and mains power.

Designed and independently tested to IP66, IP68 & IP69K standards, they are ideal for applications where ingress of dust and water must be avoided and where ease of connection, space and appearance are important considerations.

For Power

THERMO-PLASTIC VERSION

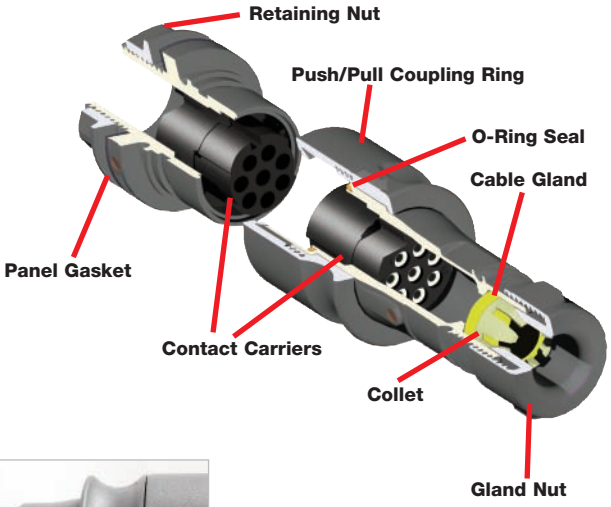

Push/pull latching mechanism*	Secure, instant latching. Quick connector mating and release
30° twist locking*	Tamperproof lock prevents accidental un-mating
IP66, IP68 and IP69K when mated	Suitable for a wide range of dust and water borne environments
All plastic body version; UL94-V0 rated, UV stable, halogen free	Light-weight, self-extinguishing material suitable for long-term outdoor use
Flex, flex in-line & panel mount body styles, with sealing caps	Complete family of products maintain sealing integrity in all styles
Polarisation and visual alignment features	Aids the correct mating of connectors
2 to 22 poles – up to 16A, 277V rated	Suitable for mains power to signal applications
'Scoop proof' contacts	Prevents damage through mis-mating – ideal for 'blind mating' applications
cULs, UL, VDE, CCC approvals (pending)	Internationally recognised certification

*patent applied for

Thermo-plastic Version

FLEX CABLE CONNECTOR

PXP6010/P PXP6010/S

- Mates with In-Line Flex or Panel Mounting versions PXP6011 & PXP6012
- Push/pull locking ring with 30˚ twist locking
- Pin or socket versions
- Leading earth on 3 pole connectors
- 2, 3, 8, 16 & 22 pole
- Screw and crimp termination

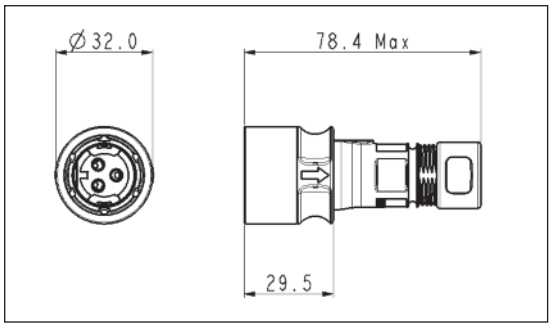

Poles	Termination	Pin Contacts	Socket Contacts	Contacts
2	Screw	PXP6010/02P/ST	PXP6010/02S/ST	Supplied Fitted
2	Crimp	PXP6010/02P/CR	PXP6010/02S/CR	Order Separately
3	Screw	PXP6010/03P/ST	PXP6010/03S/ST	Supplied Fitted
3	Crimp	PXP6010/03P/CR	PXP6010/03S/CR	Order Separately
8	Crimp	PXP6010/08P/CR	PXP6010/08S/CR	Order Separately
16	Crimp	PXP6010/16P/CR	PXP6010/16S/CR	Order Separately
22	Crimp	PXP6010/22P/CR	PXP6010/22S/CR	Order Separately

IN-LINE FLEX CABLE CONNECTOR

PXP6011/P PXP6011/S

- Mates with Flex Cable connector PXP6010
- For in-line cable connection
- Pin or socket versions
- Leading earth on 3 pole connectors
- 2, 3, 8, 16 and 22 pole
- Screw and crimp termination

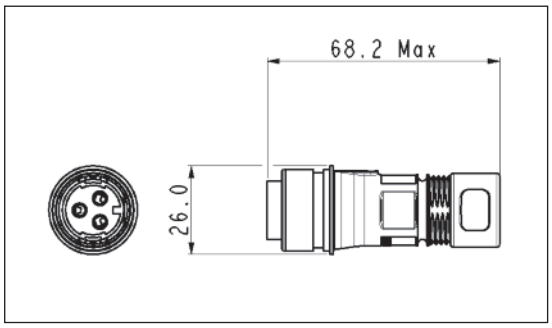

Poles	Termination	Pin Contacts	Socket Contacts	Contacts
2	Screw	PXP6011/02P/ST	PXP6011/02S/ST	Supplied Fitted
2	Crimp	PXP6011/02P/CR	PXP6011/02S/CR	Order separately
3	Screw	PXP6011/03P/ST	PXP6011/03S/ST	Supplied Fitted
3	Crimp	PXP6011/03P/CR	PXP6011/03S/CR	Order separately
8	Crimp	PXP6011/08P/CR	PXP6011/08S/CR	Order separately
16	Crimp	PXP6011/16P/CR	PXP6011/16S/CR	Order separately
22	Crimp	PXP6011/22P/CR	PXP6011/22S/CR	Order separately

FRONT PANEL MOUNTING CONNECTOR

PXP6012/P PXP6012/S

- Mates with Flex Cable connectors PXP6010
- Front panel mounting
- Single hole fixing
- Pin or socket versions
- Leading earth on 3 pole connectors
- 2, 3, 8, 16 and 22 pole
- Screw and crimp termination

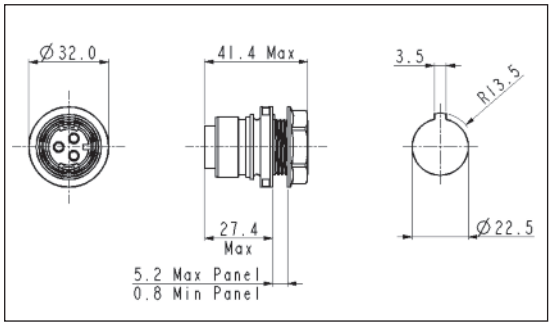

Poles	Termination	Pin Contacts	Socket Contacts	Contacts
2	Screw	PXP6012/02P/ST	PXP6012/02S/ST	Supplied Fitted
2	Crimp	PXP6012/02P/CR	PXP6012/02S/CR	Order separately
3	Screw	PXP6012/03P/ST	PXP6012/03S/ST	Supplied Fitted
3	Crimp	PXP6012/03P/CR	PXP6012/03S/CR	Order separately
8	Crimp	PXP6012/08P/CR	PXP6012/08S/CR	Order separately
16	Crimp	PXP6012/16P/CR	PXP6012/16S/CR	Order separately
22	Crimp	PXP6012/22P/CR	PXP6012/22S/CR	Order separately

Thermo-plastic Version

CRIMP CONTACTS

2, 3, 8, 16 & 22 pole contacts

- Crimp Contacts
- Gold Plated
- Current ratings:
  - 2 & 3 pole: 16A
  - 8 pole: 10A
  - 16 pole: 3A
  - 22 pole: 2A

Contacts - Crimp for 2, 3, 8, 16 and 22 pole

Contacts (for 2 & 3 pole) (Supplied in packs of 10)	Crimp
Pins	SA3545/P
Sockets	SA3545/S

Contacts (for 8 pole) (Supplied in packs of 10)	Crimp
Pins	SA3544/P
Sockets	SA3544/S

Contacts (for 16 & 22 pole) (Supplied in packs of 10)	Crimp
Pins	SA3542/P
Sockets	SA3542/S

CRIMP TOOLING

PNo 14232

- Crimp Tools for 2, 3, 8, 16 and 22 pole crimp contacts

Crimp Tooling	
Crimp Tool (2 & 3 pole)	PNo. 14232
Positioner (2 & 3 pole)	PNo. 14232/2/SP
Crimp Tool (8, 16 & 22 pole)	PNo. 14025
Positioner (8 pole)	PNo. 15021/SP
Positioner (16 & 22 pole)	PNo. 15019/SP

INSERTION/EXTRACTION TOOLS

PNo 14946

- Insertion/Extraction Tool for 2, 3, 8, 16 and 22 pole contacts

Insertion/Extraction Tools	
Insertion/Extraction Tool (2 & 3 pole)	PNo. 14946/SP
Insertion/Extraction Tool (8 pole)	PNo. 14945/SP
Insertion/Extraction Tool (16 & 22 pole)	PNo. 14944/SP

CONTACT CARRIER REMOVAL TOOL

PNo 14917

- For removal of all contact carriers

Tools	
Contact carrier removal tool (all poles)	PNo. 14917/SP

Thermo-plastic Version

SEALING CAPS

PXP6081 PXP6082 PXP6083

- Maintains IP rating of unmated connectors
- PXP6081: Fits PXP6010 (Flex Connector)
- PXP6082: Fits PXP6011 (Flex In-Line Connector) with 30˚ twist locking
- PXP6083: Fits PXP6012 (Panel Connector) with 30˚ twist locking

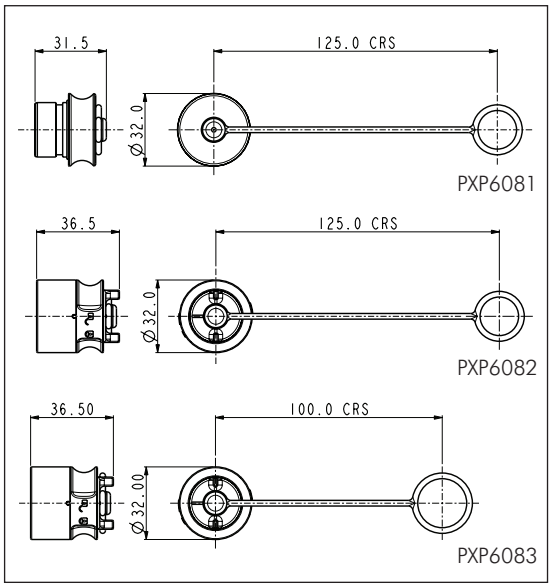

CABLE GLAND PACKS

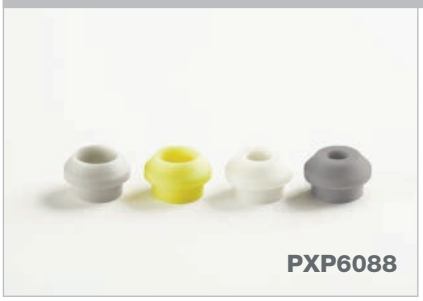

PXP6088

- Pack of all cable glands to suit cable ranges from 4.0 to 10.0mm diameter

Thermo-plastic Version

PART NO SYSTEM

PXP / xxxx / xx / x / xx / xxxx

Plastic Connector Designation

Series
6 = 6000 Series

Body Styles
010 = Flex
011 = Flex In-Line
012 = Panel

No. of Contacts
02 = 2 Pole
03 = 3 Pole
08 = 8 Pole
16 = 16 Pole
22 = 22 Pole

Contacts Type
P = Pin
S = Socket

Contacts Termination
CR = Crimp
ST = Screw (2 and 3 pole only)

Cable Entry Size
(for Flex and Flex In-Line connectors only)
0405 = 4-5mm (Dark Grey)
0507 = 5-7mm (White)
0709 = 7-9mm (Yellow)
0910 = 9-10mm (Light Grey)

Examples:
PXP6010/03/P/CR/0507= Flex cable connector, 3 pole, pin contacts, crimp termination with 5 to 7mm cable glands

PXP6012/03/S/ST= Front panel mounting connector, 3 pole, socket with screw termination

Thermo-plastic Version

SPECIFICATION

Electrical:

No. Poles:	2	3	8	16	22
Rated cable	18 AWG	18 AWG	18 AWG	22 AWG	26 AWG
Current Rating: See de-rating curves for further information					
CCC, UL and VDE (pending)	16A	12A	10A	3A	2A
cUL (pending)	13A	12A	10A	3A	2A
Voltage Rating (ac/dc):	277V	277V	277V	60V	60V
Contact Resistance:	<10mΩ				
Insulation Resistance:	>10^8MΩ @500V dc				
AC Breakdown voltage:					
2 pole	>10kV				
3 pole	>8kV				
8 to 22 pole	>5kV				
Operating Temp. Range:	–40°C to +120°C				
Approvals (pending):					
UL	UL1977				
CSA	C22.2 No.182.3-M1987 (R2009)				
VDE	IEC 61984:2009				
CCC	GB/T11918 and GB/T11919				

Material:

Body:	PC/ PBT
Colour:	Grey
Flammability Rating:	UL94 V-0
Halogen free	Yes
UV Resistance:	ISO 4892 part 3 cycle 1 (QUV)
Contacts:	Brass, Nickel plated (2A – Gold plated)
O Rings & Gaskets:	Silicon
RoHS	Compliant

Mechanical:

Locking mechanism	Push/pull with 30˚ locking Patent applied for
Sealing:	IP66 to EN60529:1992 IP68 to EN60529:1992 (10m depth for 2 weeks) IP69k to DIN 40050-9
Contact Accommodation:	
2 & 3 pole crimp	14 to 18AWG
2 & 3 pole screw terminals	1.5mm² max
8 pole crimp	18 to 20AWG
16 pole crimp	22 to 26AWG
22 pole crimp	22 to 26AWG
Cable Acceptance:	4-10mm dia.
Cable retention force (to BS EN61984):	
4 - 9mm dia cable	80N
9 - 10mm dia cable	100N
Terminations:	
2 Pole:	Screw Terminals
3 Pole:	Screw Terminals & Crimp Contacts
8 Pole:	Crimp Contacts
16 Pole:	Crimp Contacts
22 Pole:	Crimp Contacts
Tightening Torques:	
Gland Nut:	1.13Nm (10lb.in)
Panel Nut:	1.7Nm (15lbf.in.)
Panel Nut Thread:	M22 x 1.5-6g
Dimensions:	
Diameter: (over coupling ring)	32mm
Diameter: (panel hole cut-out)	22.5mm

Mated dimensions - Flex to panel connector

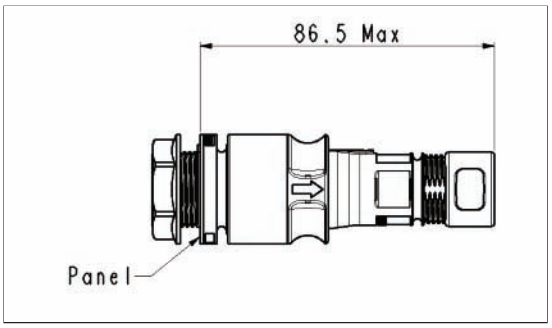

Mated dimensions - Flex connector to in-line connector

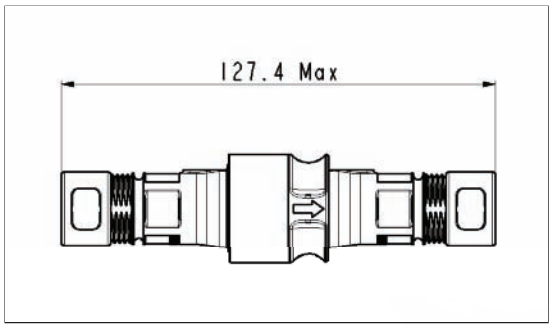

Thermo-plastic Version

CURRENT CARRYING CAPACITY

The thermal properties of the materials used in the construction of a connector limit the current carrying capacity. There are a number of factors that determine the amount of current that can be handled: contact spacing, size of cable, ambient temperature and the heat that is generated by the current passing through the connector.

The maximum current varies with different contact layouts, and because of these factors it is necessary to produce de-rating curves for each pole variant. This de-rating curve is specified in the standard IEC 60512 part 3.

De-rating curves are plotted for each contact carrier combination with the current being carried simultaneously by all contacts. These graphs show the heat rise generated as the current is increased.

The red line indicates the direct correlation between current applied and the measured temperature rise within the connector. The dotted blue line shows rated current and the green line is derived by applying a factor of 0.8 to the original plot data to give a de-rating curve. The dashed blue line shows the rated current.

The shaded area under the 0.8 curve shows the permitted operating area, and allows safe current vs ambient temperature characteristics to be determined.

- = tested operating limits
- = de-rated operating limits
- = rated current

6000 Series Current vs. Temperature Characteristics

2 Pole, Plastic Body, Crimp Terminal, 18 AWG wire
current applied through all pins simultaneously

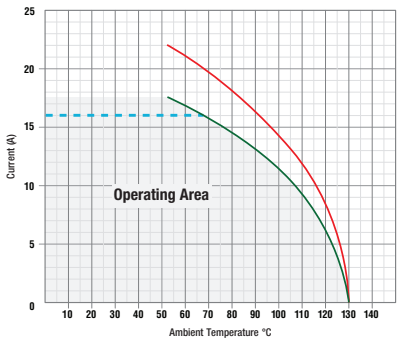

3 Pole, Plastic Body, Screw Terminal, 18 AWG wire
current applied through all pins simultaneously

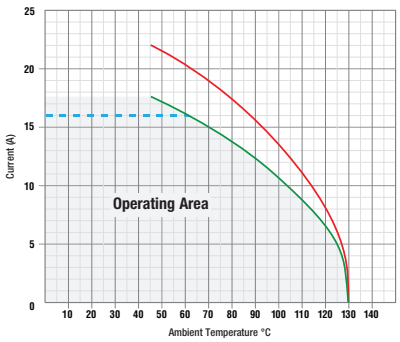

8 Pole, Plastic Body, Crimp Terminal, 18 AWG wire
current applied through all pins simultaneously

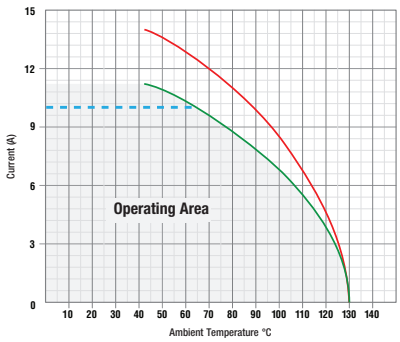

8 Pole, Plastic Body, Crimp Terminal, 20 AWG wire
current applied through all pins simultaneously

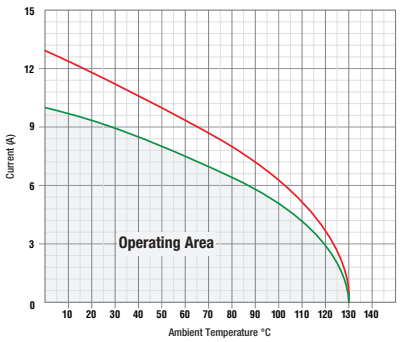

16 Pole, Plastic Body, Crimp Terminal, 22 AWG wire
current applied through all pins simultaneously

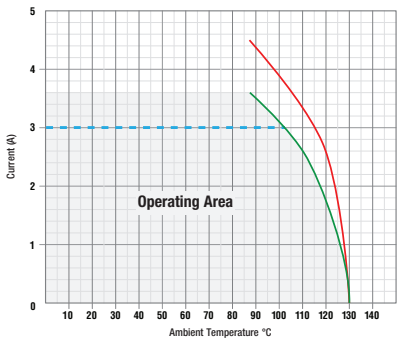

16 Pole, Plastic Body, Crimp Terminal, 26 AWG wire
current applied through all pins simultaneously

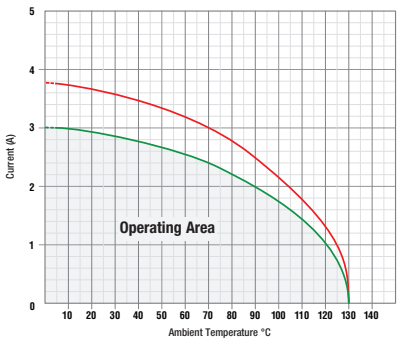

22 Pole, Plastic Body, Crimp Terminal, 26 AWG wire
current applied through all pins simultaneously

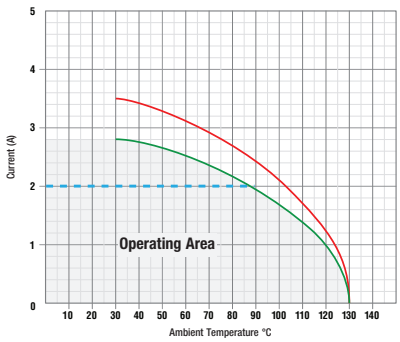

Europe
Elektron Technology, Woodland Road, Torquay, Devon UK TQ2 7AY
t: +44 (0)1803 407752
e: europe@elektron-technology.com

The Americas
Elektron Technology, 31-315 Plantation Drive Thousand Palms CA 92276
t: +1 760-343-3650
e: americas@elektron-technology.com

China and Asia
Elektron Technology, Room 902 No.568 Hengfeng Rd, Henhui Int Building, Shanghai 200070, China
t: +86 21-6040-0060
e: asia@elektron-technology.com

Issue no: V1.0

О компании

ООО "ТрейдЭлектроникс" - это оперативные поставки широкого спектра электронных компонентов отечественного и импортного производства напрямую от производителей и с крупнейших мировых складов. Реализуемая нашей компанией продукция насчитывает более полумиллиона наименований.

Благодаря этому наша компания предлагает к поставке практически не ограниченный ассортимент компонентов как оптовыми, мелкооптовыми партиями, так и в розницу.

Наличие собственной эффективной системы логистики обеспечивает надежную поставку продукции по конкурентным ценам в точно указанные сроки.

Срок поставки со стоков в **Европе и Америке – от 3 до 14 дней.**

Срок поставки из **Азии – от 10 дней.**

Благодаря развитой сети поставщиков, помогаем в поиске и приобретении экзотичных или снятых с производства компонентов.

Предоставляем спец цены на элементы для создания инженерных сэмплов.

Упорный труд, качественный результат дают нам право быть уверенными в себе и надежными для наших клиентов.

Наша компания это:

- Гарантия качества поставляемой продукции
- Широкий ассортимент
- Минимальные сроки поставок
- Техническая поддержка
- Подбор комплектации
- Индивидуальный подход
- Гибкое ценообразование

Наша организация особенно сильна в поставках модулей, микросхем, пассивных компонентов, ксайленсах (XC), EPF, EPM и силовой электроники.

Большой выбор предлагаемой продукции, различные виды оплаты и доставки, позволят Вам сэкономить время и получить максимум выгоды от сотрудничества с нами!

Trade Electronics.ru

гарантия бесперебойности производства и качества выпускаемой продукции

Перечень производителей, продукцию которых мы поставляем на российский рынок

AMD
ANALOG DEVICES
BOURNS
Coilcraft
élantec Semiconductor, Inc.
HARRIS
Infineon
JRC
MICREL
MOTOROLA
nichicon
PHILIPS
ROHM
SGS-THOMSON
Sipex
TAIYO YUDEN
TOKO
ZILOG
Winbond
Allegro
ATMEL
BURR - BROWN
EXAR
HITACHI
intel
Lattice
muRata
OKI
QUALCOMM
SAMSUNG
SHARP
SONY
TDK
TOSHIBA
KYOCERA
ALTERA
AVX
CITILYST
CYPRESS
FAIRCHILD SEMICONDUCTOR
HOLTEK
International IOR Rectifier
LINEAR TECHNOLOGY
MITSUBISHI
National Semiconductor
ON Semiconductor
REALTEK
SANYO
SHINDENGEN
SGS
TECCOR
TUNDRA
XILINX
Amphenol
Bay Linear
CIRRUS LOGIC
DALLAS
FUJITSU
IDT
intersil
MAXIM
molex
NEC
Panasonic
RENESAS
SII
SIEMENS
ST
Texas Instruments
VISHAY
ZETEX SEMICONDUCTORS

Trade Electronics.ru

гарантия бесперебойности производства и качества выпускаемой продукции

С удовольствием будем прорабатывать для Вас поставки всех необходимых компонентов по текущим запросам для скорейшего выявления групп элементов, по которым сотрудничество именно с нашей компанией будет для Вас максимально выгодным!

С уважением,

Менеджер отдела продаж ООО

«Трейд Электроникс»

Шишлаков Евгений

8 (495)668-30-28 доб 169

manager28@tradeelectronics.ru

http://www.tradeelectronics.ru/