9- and 11-Channel, Muxed Input LCD Reference Buffers

AD8509/AD8511

FEATURES

Single-supply operation: 3.3 V to 6.5 V
High output current: 300 mA
Low supply current: 6 mA
Stable with 1000 pF loads
Pin-compatible with LMC6009
Pin-compatible with CL-FP6131
48-lead, Pb-free, TSSOP package

APPLICATION

LCD line inversion gamma references

FUNCTIONAL BLOCK DIAGRAM

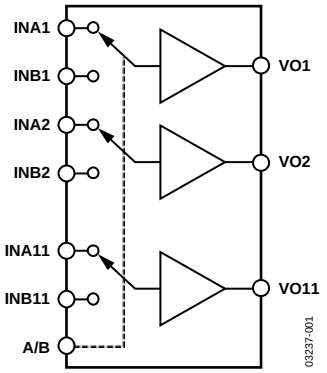

Figure 1.

GENERAL DESCRIPTION

The AD8509 and AD8511 are 9-channel and 11-channel LCD reference buffers, respectively, designed to drive 64 gray scale column drivers. Each buffer has an A/B input to select between two voltages for LCD displays. These buffers drive the resistor ladders of LCD column drivers for gamma correction. These LCD drivers have higher slew rates and higher output drive currents than similar competitive parts. This increases the stability of the reference ladder, resulting in better gray scale and visual performance.

The AD8509 and AD8511 are specified over the −40°C to +85°C temperature range. They are available in 48-lead, thin shrink small outline (TSSOP), surface-mount, Pb-free packages in tape and reel.

PIN CONFIGURATIONS

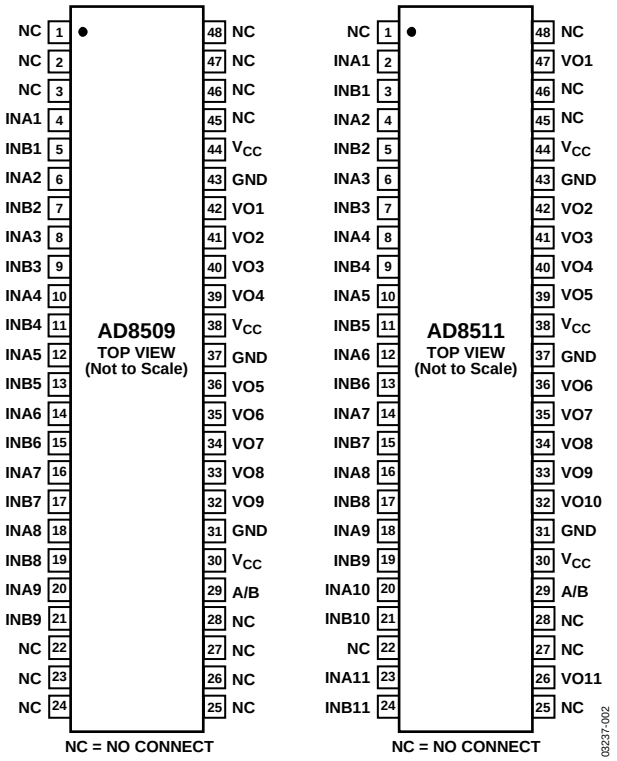

Figure 2. AD8509 and AD8511 48-Lead TSSOP (RU Suffix)

Rev. B

Information furnished by Analog Devices is believed to be accurate and reliable. However, no responsibility is assumed by Analog Devices for its use, nor for any infringements of patents or other rights of third parties that may result from its use. Specifications subject to change without notice. No license is granted by implication or otherwise under any patent or patent rights of Analog Devices. Trademarks and registered trademarks are the property of their respective owners.

One Technology Way, P.O. Box 9106, Norwood, MA 02062-9106, U.S.A.
Tel: 781.329.4700 **www.analog.com**
Fax: 781.326.8703 **© 2005 Analog Devices, Inc. All rights reserved.**

TABLE OF CONTENTS

Specifications 3
Electrical Characteristics 3
Absolute Maximum Ratings 4
ESD Caution 4
Typical Performance Characteristics 5
Applications 7
Outline Dimensions 8
Ordering Guide 8

REVISION HISTORY

1/05—Rev. A to Rev. B

Changed Maximum Operating Voltage ..... Universal
Change to Features List 1
Changes to Specifications Table 3
Changes to Ordering Guide 8

9/04—Rev. 0 to Rev. A

Format Updated ..... Universal
Added Pb-Free Part ..... Universal
Changed Temperature Range ..... Universal
Changed Applications Section 1
Changes to Ordering Guide 8

10/97—Revision 0: Initial Version

SPECIFICATIONS

ELECTRICAL CHARACTERISTICS

V_S = 5 V, T_A = 25°C, unless otherwise noted.

Table 1.

Parameter	Symbol	Conditions	Min	Typ	Max	Unit
INPUT CHARACTERISTICS						
Offset Voltage	V_{OS}				20	mV
Input Bias Current	I_B				50	nA
Voltage Gain	A_{VO}		0.985			V/V
OUTPUT CHARACTERISTICS						
Output Voltage High	V_{OH}	I_{LOAD} = +20 mA	4.8			V
Output Voltage Low	V_{OL}	I_{LOAD} = −20 mA			200	mV
Output Short-Circuit Current	I_{SC}		120	350		mA
POWER SUPPLY						
Load Regulation		V_{IN} = 0.5 V – 4.5 V, I_{SOURCE} = 20 mA		7		mV
		V_{IN} = 0.5 V – 4.5 V, I_{SINK} = 20 mA		7		mV
Supply Current	I_{SY}	AD8509, V_{IN} = 2.5 V			8.5	mA
	I_{SY}	AD8511, V_{IN} = 2.5 V			10	mA
Supply Voltage Range	V_S		3.3		6.5	V
DYNAMIC PERFORMANCE						
Slew Rate		C_L = 15 pF		7		V/µs
		R_L = 250 Ω		6.2		V/µs
Settling Time	t_S	IDC = 13 mA (sink/source)		3	6	µs
LOGIC INPUT CHARACTERISTICS						
Input Current Low	I_{IL}				1.0	µA
Input Current High	I_{IH}				1.5	µA
Input Voltage Low	V_{IL}				0.8	V
Input Voltage High	V_{IH}		2.0			V

ABSOLUTE MAXIMUM RATINGS

Table 2.

Parameter	Rating
Supply Voltage	7 V
Input Voltage	GND to V_S
Storage Temperature Range	
RU Package	−65°C to +150°C
Operating Temperature Range	−40°C to +85°C
Junction Temperature Range	
RU Package	−65°C to +150°C
Lead Temperature Range (Soldering, 60 sec)	300°C

Stresses above those listed under Absolute Maximum Ratings may cause permanent damage to the device. This is a stress rating only; the functional operation of the device at these or any other conditions above those indicated in the operational sections of this specification is not implied. Exposure to absolute maximum rating conditions for extended periods may affect device reliability.

Table 3.

Package Type	θ_{JA}[1]	θ_{JC}	Unit
48-lead Pb-free TSSOP (RU)	115	42	°C/W

[1] θ_{JA} is specified for the worst-case conditions, that is, θ_{JA} is specified for devices soldered in circuit boards for surface-mount packages.

Table 4. MUX Function

A/B Select (Pin 29)	Input
Logic High	INAx
Logic Low	INBx

ESD CAUTION

ESD (electrostatic discharge) sensitive device. Electrostatic charges as high as 4000 V readily accumulate on the human body and test equipment and can discharge without detection. Although this product features proprietary ESD protection circuitry, permanent damage may occur on devices subjected to high energy electrostatic discharges. Therefore, proper ESD precautions are recommended to avoid performance degradation or loss of functionality.

TYPICAL PERFORMANCE CHARACTERISTICS

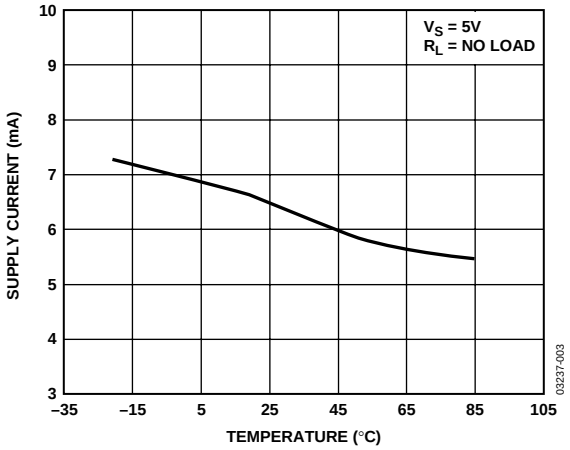

Figure 3. Supply Current vs. Temperature

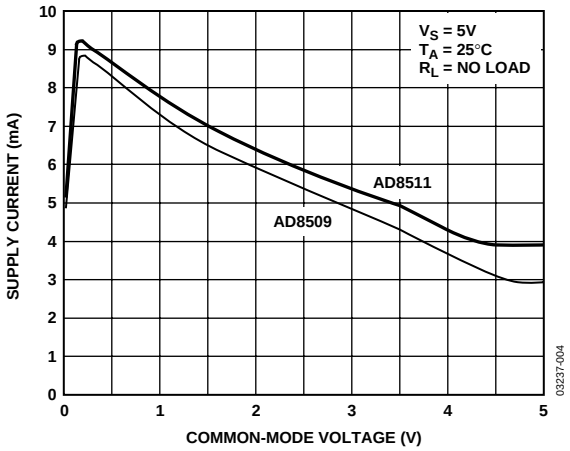

Figure 4. Supply Current vs. Common-Mode Voltage

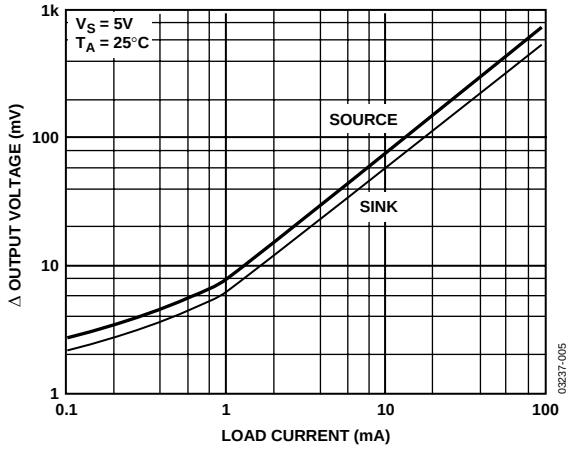

Figure 5. Output Voltage to Supply Rail vs. Load Current

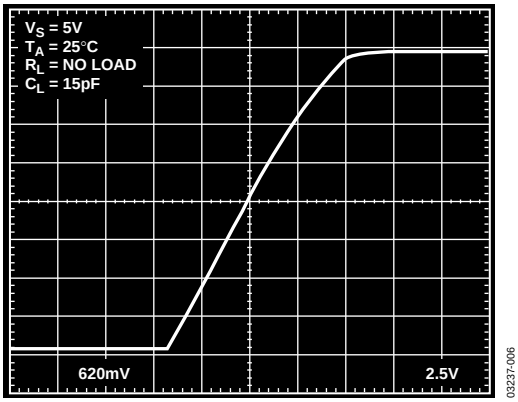

Figure 6. Large Signal Transient Response—Rising

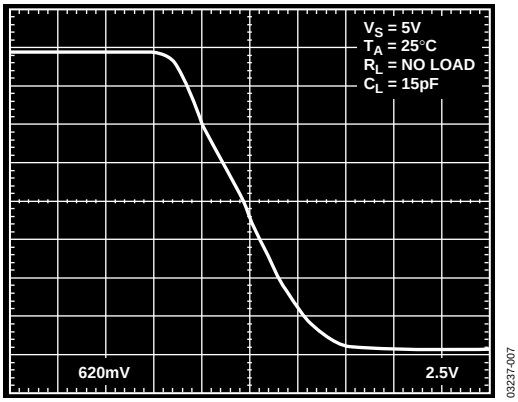

Figure 7. Large Signal Transient Response—Falling

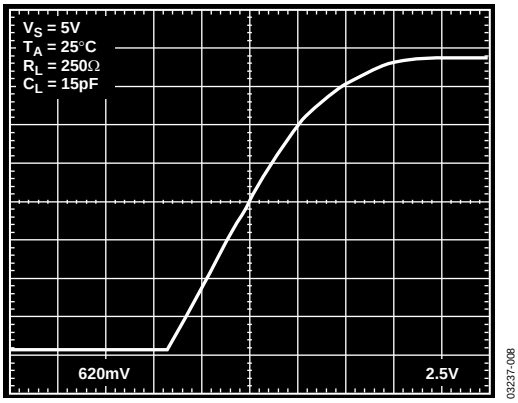

Figure 8. Large Signal Transient Response—Rising

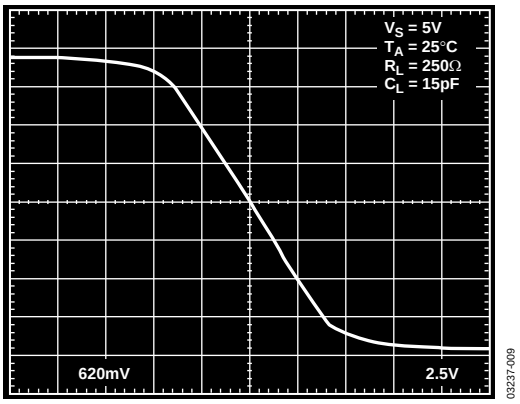

Figure 9. Large Signal Transient Response—Falling

APPLICATIONS

The AD8509 and AD8511 are CMOS buffers with A/B inputs, which are used to select between two different reference voltages set up by an external resistor ladder. Input bias currents are orders of magnitude less than competitive parts. This allows very large resistor ladders to be used to save supply current. A guaranteed value of 50 nA is much higher than actual values and is limited by leakage in the test system.

Buffer outputs are designed to drive resistive loads. They are also stable with capacitive loads, so no resistors should be used in series with these outputs to attain the best display performance. Outputs have high slew rates and 6 μs settling times. Each output can deliver a minimum of 120 mA, assuring fast response to varying loads.

The AD8509 is a 9-channel buffer and is similar to the LMC6009 in functionality. The AD8511 is an 11-channel buffer similar to the CL-FP6131. However, the control to select either 9- or 11-channel operation, the EN_11 pin of the CL-FP6131, is not available on the AD8511. If 9-channel operation is desired, use the AD8509.

Power supply pins on the AD8509 and AD8511 have multiple ground and V_{CC} connections. Because of the high peak currents that these buffers can deliver, it is strongly recommended that all of the ground and V_{CC} pins be connected, and that the V_{CC} pins be suitably bypassed.

OUTLINE DIMENSIONS

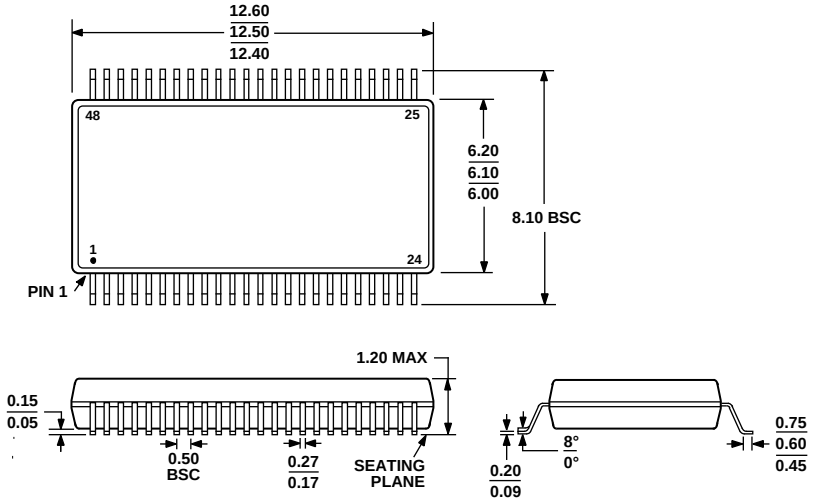

Figure 10. 48-Lead Thin Shrink Small Outline Package [TSSOP] (RU-48)
Dimensions shown in millimeters

ORDERING GUIDE

Model[1]	Temperature Range	Package Description	Package Option
AD8509ARU-REEL	−40°C to +85°C	48-Lead Thin Shrink Small Outline Package	RU-48
AD8509ARUZ-REEL[2]	−40°C to +85°C	48-Lead Thin Shrink Small Outline Package	RU-48
AD8511ARU-REEL	−40°C to +85°C	48-Lead Thin Shrink Small Outline Package	RU-48
AD8511ARUZ-REEL[2]	−40°C to +85°C	48-Lead Thin Shrink Small Outline Package	RU-48

[1] All models only available in 2,500-piece reels.
[2] Z = Pb-free part.

© 2005 Analog Devices, Inc. All rights reserved. Trademarks and registered trademarks are the property of their respective owners.
C03237–0–1/05(B)

О компании

ООО "ТрейдЭлектроникс" - это оперативные поставки широкого спектра электронных компонентов отечественного и импортного производства напрямую от производителей и с крупнейших мировых складов. Реализуемая нашей компанией продукция насчитывает более полумиллиона наименований.

Благодаря этому наша компания предлагает к поставке практически не ограниченный ассортимент компонентов как оптовыми, мелкооптовыми партиями, так и в розницу.

Наличие собственной эффективной системы логистики обеспечивает надежную поставку продукции по конкурентным ценам в точно указанные сроки.

Срок поставки со стоков в **Европе и Америке – от 3 до 14 дней.**

Срок поставки из **Азии – от 10 дней.**

Благодаря развитой сети поставщиков, помогаем в поиске и приобретении экзотичных или снятых с производства компонентов.

Предоставляем спец цены на элементы для создания инженерных сэмплов.

Упорный труд, качественный результат дают нам право быть уверенными в себе и надежными для наших клиентов.

Наша компания это:

- Гарантия качества поставляемой продукции
- Широкий ассортимент
- Минимальные сроки поставок
- Техническая поддержка
- Подбор комплектации
- Индивидуальный подход
- Гибкое ценообразование

Наша организация особенно сильна в поставках модулей, микросхем, пассивных компонентов, ксайленсах (XC), EPF, EPM и силовой электроники.

Большой выбор предлагаемой продукции, различные виды оплаты и доставки, позволят Вам сэкономить время и получить максимум выгоды от сотрудничества с нами!

Trade Electronics.ru

гарантия бесперебойности производства и качества выпускаемой продукции

Перечень производителей, продукцию которых мы поставляем на российский рынок

AMD
ANALOG DEVICES
BOURNS
Coilcraft
élantec Semiconductor, Inc.
HARRIS
Infineon
JRC
MICREL
MOTOROLA
nichicon
PHILIPS
ROHM
SGS-THOMSON
Sipex
TAIYO YUDEN
TOKO
ZILOG
Winbond
Allegro
ATMEL
BURR - BROWN
EXAR
HITACHI
intel
Lattice
muRata
OKI
QUALCOMM
SAMSUNG
SHARP
SONY
TDK
TOSHIBA
KYOCERA
ALTERA
AVX
CITILYST
CYPRESS
FAIRCHILD SEMICONDUCTOR
HOLTEK
International IOR Rectifier
LINEAR TECHNOLOGY
MITSUBISHI
National Semiconductor
ON Semiconductor
REALTEK
SANYO
SHINDENGEN
SGS
TECCOR
TUNDRA
XILINX
Amphenol
Bay Linear
CIRRUS LOGIC
DALLAS
FUJITSU
IDT
intersil
MAXIM
molex
NEC
Panasonic
RENESAS
SII
SIEMENS
ST
Texas Instruments
VISHAY
ZETEX SEMICONDUCTORS

Trade Electronics.ru

гарантия бесперебойности производства и качества выпускаемой продукции

С удовольствием будем прорабатывать для Вас поставки всех необходимых компонентов по текущим запросам для скорейшего выявления групп элементов, по которым сотрудничество именно с нашей компанией будет для Вас максимально выгодным!

С уважением,

Менеджер отдела продаж ООО

«Трейд Электроникс»

Шишлаков Евгений

8 (495)668-30-28 доб 169

manager28@tradeelectronics.ru

http://www.tradeelectronics.ru/