Low Cost, Low Power CMOS General Purpose Analog Front End

AD73311

FEATURES

16-Bit A/D Converter
16-Bit D/A Converter
Programmable Input/Output Sample Rates
75 dB ADC SNR
70 dB DAC SNR
64 kS/s Maximum Sample Rate
–90 dB Crosstalk
Low Group Delay (25 μs Typ per ADC Channel, 50 μs Typ per DAC Channel)
Programmable Input/Output Gain
Flexible Serial Port which Allows up to 8 Devices to Be Connected in Cascade
Single (+2.7 V to +5.5 V) Supply Operation
50 mW Max Power Consumption at 2.7 V
On-Chip Reference
20-Lead SOIC/SSOP Package

APPLICATIONS

General Purpose Analog I/O
Speech Processing
Cordless and Personal Communications
Telephony
Active Control of Sound & Vibration
Data Communications

GENERAL DESCRIPTION

The AD73311 is a complete front-end processor for general purpose applications including speech and telephony. It features a 16-bit A/D conversion channel and a 16-bit D/A conversion channel. Each channel provides 70 dB signal-to-noise ratio over a voiceband signal bandwidth. The final channel bandwidth can be reduced, and signal-to-noise ratio improved, by external digital filtering in a DSP engine.

The AD73311 is suitable for a variety of applications in the speech and telephony area including low bit rate, high quality compression, speech enhancement, recognition and synthesis. The low group delay characteristic of the part makes it suitable for single or multichannel active control applications.

The gains of the A/D and D/A conversion channels are programmable over 38 dB and 21 dB ranges respectively. An on-chip reference voltage is included to allow single supply operation. A serial port (SPORT) allows easy interfacing of single or cascaded devices to industry standard DSP engines.

The AD73311 is available in both 20-lead SOIC and SSOP packages.

FUNCTIONAL BLOCK DIAGRAM

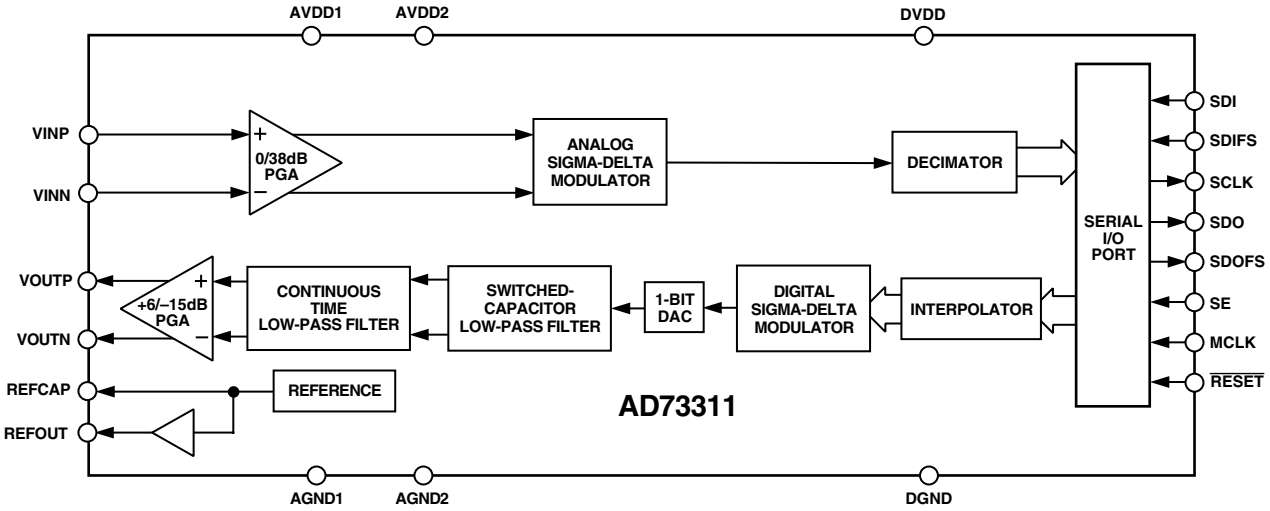

REV. B

Information furnished by Analog Devices is believed to be accurate and reliable. However, no responsibility is assumed by Analog Devices for its use, nor for any infringements of patents or other rights of third parties which may result from its use. No license is granted by implication or otherwise under any patent or patent rights of Analog Devices.

One Technology Way, P.O. Box 9106, Norwood, MA 02062-9106, U.S.A.
Tel: 781/329-4700 World Wide Web Site: http://www.analog.com
Fax: 781/326-8703
© Analog Devices, Inc., 2000

AD73311–SPECIFICATIONS[1] (AVDD = +3 V ± 10%; DVDD = +3 V ± 10%; DGND = AGND = 0 V, f_{MCLK} = 16.384 MHz, F_S = 64 kHz; T_A = T_{MIN} to T_{MAX}, unless otherwise noted)

Parameter	AD73311A Min	Typ	Max	Unit	Test Conditions/Comments
REFERENCE					5VEN = 0
REFCAP					
Absolute Voltage, V_{REFCAP}	1.08	1.2	1.32	V	
REFCAP TC		50		ppm/°C	0.1 µF Capacitor Required from
REFOUT					REFCAP to AGND2
Typical Output Impedance		68		Ω	
Absolute Voltage, V_{REFOUT}	1.08	1.2	1.32	V	Unloaded
Minimum Load Resistance	1			kΩ	
Maximum Load Capacitance			100	pF	
ADC SPECIFICATIONS					
Maximum Input Range at VIN[2, 3]			1.578	V p-p	5VEN = 0, Measured Differentially
			–2.85	dBm	
Nominal Reference Level at VIN		1.0954		V p-p	5VEN = 0, Measured Differentially
(0 dBm0)		–6.02		dBm	
Absolute Gain					
PGA = 0 dB	–0.75	0.1	+1.0	dB	1.0 kHz, 0 dBm0
PGA = 38 dB	–1.5	–0.5	+0.5	dB	1.0 kHz, 0 dBm0
Gain Tracking Error		±0.1		dB	1.0 kHz, +3 dBm0 to –50 dBm0
Signal to (Noise + Distortion)					Refer to Figure 5
PGA = 0 dB	70	76		dB	300 Hz to 3.4 kHz Frequency Range
	55	56		dB	0 Hz to 32 kHz Frequency Range
PGA = 38 dB	61	65		dB	300 Hz to 3.4 kHz Frequency Range
	53	54		dB	0 Hz to 32 kHz Frequency Range
Total Harmonic Distortion					
PGA = 0 dB		–83	–70	dB	
PGA = 38 dB		–83	–70	dB	
Intermodulation Distortion		–78		dB	PGA = 0 dB
Idle Channel Noise		–76		dBm0	PGA = 0 dB
Crosstalk		–100		dB	ADC Input Signal Level: 1.0 kHz, 0 dBm0
					DAC Input at Idle
DC Offset	–20	+15	+50	mV	PGA = 0 dB
Power Supply Rejection		–55		dB	Input Signal Level at AVDD and DVDD
					Pins 1.0 kHz, 100 mV p-p Sine Wave
Group Delay[4, 5]		25		µs	64 kHz Output Sample Rate
Input Resistance at VIN[2, 4]		25		kΩ[6]	DMCLK = 16.384 MHz
DAC SPECIFICATIONS					
Maximum Voltage Output Swing[2]					
Single Ended			1.578	V p-p	5VEN = 0, PGA = 6 dB
			–2.85	dBm	
Differential			3.156	V p-p	5VEN = 0, PGA = 6 dB
			3.17	dBm	
Nominal Voltage Output Swing (0 dBm0)					
Single-Ended		1.0954		V p-p	5VEN = 0, PGA = 6 dB
		–6.02		dBm	
Differential		2.1909		V p-p	5VEN = 0, PGA = 6 dB
		0		dBm	
Output Bias Voltage	1.08	1.2	1.32	V	5VEN = 0, REFOUT Unloaded
Absolute Gain	–0.75	+0.2	+1.0	dB	1.0 kHz, 0 dBm0
Gain Tracking Error		±0.1		dB	1.0 kHz, +3 dBm0 to –50 dBm0
Signal to (Noise + Distortion)					AVDD = +3 V ± 5%; Refer to Figure 5
PGA = 0 dB	62.5	70		dB	300 Hz to 3.4 kHz Frequency Range
		62.5		dB	0 Hz to 32 kHz Frequency Range
PGA = 6 dB	62.5	71		dB	300 Hz to 3.4 kHz Frequency Range
		62.5		dB	0 Hz to 32 kHz Frequency Range
Total Harmonic Distortion					AVDD = +3 V ± 5%
PGA = 0 dB		–70	–62.5	dB	
PGA = 6 dB		–70	–62.5	dB	
Intermodulation Distortion		–68		dB	PGA = 0 dB
Idle Channel Noise		–82		dBm0	PGA = 0 dB
Crosstalk		–100		dB	ADC Input Signal Level: AGND; DAC
					Output Signal Level: 1.0 kHz, 0 dBm0

Parameter	AD73311A Min	Typ	Max	Unit	Test Conditions/Comments
DAC SPECIFICATIONS (Continued)					
Power Supply Rejection		–55		dB	Input Signal Level at AVDD and DVDD Pins: 1.0 kHz, 100 mV p-p Sine Wave
Group Delay[4, 5]		25		µs	64 kHz Input Sample Rate, Interpolator Bypassed (CRE:5 = 1)
Output DC Offset[2, 7]	–30	+20	+70	mV	PGA = 6 dB
Minimum Load Resistance, R_L[2, 8]					
Single-Ended	150			Ω	
Differential	150			Ω	
Maximum Load Capacitance, C_L[2, 8]					
Single-Ended			500	pF	
Differential			100	pF	
FREQUENCY RESPONSE (ADC AND DAC)[9] Typical Output					
0 Hz		0		dB	
2000 Hz		–0.1		dB	
4000 Hz		–0.25		dB	
8000 Hz		–0.6		dB	
12000 Hz		–1.4		dB	
16000 Hz		–2.8		dB	
20000 Hz		–4.5		dB	Channel Frequency Response Is
24000 Hz		–7.0		dB	Programmable by Means of External
28000 Hz		–9.5		dB	Digital Filtering
> 32000 Hz		< –12.5		dB	
LOGIC INPUTS					
V_{INH}, Input High Voltage	V_{DD} – 0.8		V_{DD}	V	
V_{INL}, Input Low Voltage	0		0.8	V	
I_{IH}, Input Current			10	µA	
C_{IN}, Input Capacitance			10	pF	
LOGIC OUTPUT					
V_{OH}, Output High Voltage	V_{DD} – 0.4		V_{DD}	V	|IOUT| ≤ 100 µA
V_{OL}, Output Low Voltage	0		0.4	V	|IOUT| ≤ 100 µA
Three-State Leakage Current	–10		+10	µA	
POWER SUPPLIES					
AVDD1, AVDD2	2.7		3.3	V	
DVDD	2.7		3.3	V	
I_{DD}[10]					See Table I

NOTES
[1]Operating temperature range is as follows: –40°C to +85°C. Therefore, T_{MIN} = –40°C and T_{MAX} = +85°C.
[2]Test conditions: Input PGA set for 0 dB gain, Output PGA set for 6 dB gain, no load on analog outputs (unless otherwise noted).
[3]At input to sigma-delta modulator of ADC.
[4]Guaranteed by design.
[5]Overall group delay will be affected by the sample rate and the external digital filtering.
[6]The ADC's input impedance is inversely proportional to DMCLK and is approximated by: (4×10^{11})/DMCLK.
[7]Between VOUTP and VOUTN.
[8]At VOUT output.
[9]Frequency responses of ADC and DAC measured with input at audio reference level (the input level that produces an output level of –10 dBm0), with 38 dB preamplifier bypassed and input gain of 0 dB.
[10]Test Conditions: no load on digital inputs, analog inputs ac coupled to ground, no load on analog outputs.

Specifications subject to change without notice.

Table I. Current Summary (AVDD = DVDD = +3.3 V)

Conditions	Analog Current	Internal Digital Current	External Interface Current	Total Current (Max)	SE	MCLK ON	Comments
ADC On Only	7	3	0.5	11.5	1	YES	REFOUT Disabled
ADC and DAC On	10	5	0.5	17.5	1	YES	REFOUT Disabled
REFCAP On Only	0.75	0	0	1.2	0	NO	REFOUT Disabled
REFCAP and REFOUT On Only	3.0	0	0	4.5	0	NO	
All Sections Off	0	0.85	0	1.2	0	YES	MCLK Active Levels Equal to 0 V and DVDD
All Sections Off	0.00	0.007	0	0.04	0	NO	Digital Inputs Static and Equal to 0 V or DVDD

The above values are in mA and are typical values unless otherwise noted.

AD73311–SPECIFICATIONS[1] (AVDD = +5 V ± 10%; DVDD = +5 V ± 10%; DGND = AGND = 0 V, f_{MCLK} = 16.384 MHz, F_S = 64 kHz; T_A = T_{MIN} to T_{MAX}, unless otherwise noted)

Parameter	AD73311A Min	Typ	Max	Unit	Test Conditions/Comments
REFERENCE					
REFCAP					
Absolute Voltage, V_{REFCAP}		1.2		V	5VEN = 0
		2.4		V	5VEN = 1
REFCAP TC		50		ppm/°C	0.1 µF Capacitor Required from REFCAP to AGND2
REFOUT					
Typical Output Impedance		68		Ω	
Absolute Voltage, V_{REFOUT}		1.2		V	5VEN = 0, Unloaded
		2.4		V	5VEN = 1, Unloaded
Minimum Load Resistance	2			kΩ	5VEN = 1
Maximum Load Capacitance			100	pF	
ADC SPECIFICATIONS					
Maximum Input Range at VIN[2, 3]		3.156		V p-p	5VEN = 1, Measured Differentially
		3.17		dBm	
Nominal Reference Level at VIN		2.1908		V p-p	5VEN = 1, Measured Differentially
(0 dBm0)		0		dBm	
Absolute Gain					
PGA = 0 dB		0.1		dB	1.0 kHz, 0 dBm0
PGA = 38 dB		–0.5		dB	1.0 kHz, 0 dBm0
Gain Tracking Error		±0.1		dB	1.0 kHz, +3 dBm0 to –50 dBm0
Signal to (Noise + Distortion)					Refer to Figure 5
PGA = 0 dB		76		dB	300 Hz to 3.4 kHz Frequency Range
		59		dB	0 Hz to 32 kHz Frequency Range
PGA = 38 dB		71		dB	300 Hz to 3.4 kHz Frequency Range
		57		dB	0 Hz to 32 kHz Frequency Range
Total Harmonic Distortion					
PGA = 0 dB		–76		dB	
PGA = 38 dB		–69		dB	
Intermodulation Distortion		–69		dB	PGA = 0 dB
Idle Channel Noise		–67		dBm0	PGA = 0 dB
Crosstalk		–80		dB	ADC Input Signal Level: 1.0 kHz, 0 dBm0 DAC Input at Idle
DC Offset		+20		mV	PGA = 0 dB
Power Supply Rejection		–55		dB	Input Signal Level at AVDD and DVDD Pins 1.0 kHz, 100 mV p-p Sine Wave
Group Delay[4, 5]		25		µs	64 kHz Output Sample Rate
Input Resistance at VIN[2, 4]		25		kΩ[6]	DMCLK = 16.384 MHz
DAC SPECIFICATIONS					
Maximum Voltage Output Swing[2]					
Single Ended		3.156		V p-p	5VEN = 1, PGA = 6 dB
		3.17		dBm	
Differential		6.312		V p-p	5VEN = 1, PGA = 6 dB
		9.19		dBm	
Nominal Voltage Output Swing (0 dBm0)					
Single-Ended		2.1908		V p-p	5VEN = 1, PGA = 6 dB
		0		dBm	
Differential		4.3918		V p-p	5VEN = 1, PGA = 6 dB
		6.02		dBm	
Output Bias Voltage		V_{REFOUT}		V typ	5VEN = 1, REFOUT Unloaded
Absolute Gain		±0.4		dB	1.0 kHz, 0 dBm0
Gain Tracking Error		±0.1		dB	1.0 kHz, +3 dBm0 to –50 dBm0
Signal to (Noise + Distortion)					Refer to Figure 5
PGA = 0 dB		66		dB	300 Hz to 3.4 kHz Frequency Range
		64		dB	0 Hz to 32 kHz Frequency Range
PGA = 6 dB		66		dB	300 Hz to 3.4 kHz Frequency Range
		64		dB	0 Hz to 32 kHz Frequency Range
Total Harmonic Distortion					
PGA = 0 dB		–62.5		dB	
PGA = 6 dB		–62.5		dB	
Intermodulation Distortion		–60		dB	PGA = 0
Idle Channel Noise		–75		dBm0	PGA = 0
Crosstalk		–80		dB	ADC Input Signal Level: AGND; DAC Output Signal Level: 1.0 kHz, 0 dBm0

Parameter	AD73311A Min	Typ	Max	Unit	Test Conditions/Comments
DAC SPECIFICATIONS (Continued)					
Power Supply Rejection		–55		dB	Input Signal Level at AVDD and DVDD Pins: 1.0 kHz, 100 mV p-p Sine Wave
Group Delay[4, 5]		25		µs	64 kHz Input Sample Rate, Interpolator Bypassed (CRE:5 = 1)
Output DC Offset[2, 7]		+30		mV	PGA = 6 dB
Minimum Load Resistance, R_L[2, 8]					
Single-Ended	150			Ω	
Differential	150			Ω	
Maximum Load Capacitance, C_L[2, 8]					
Single-Ended			500	pF	
Differential			100	pF	
FREQUENCY RESPONSE					
(ADC AND DAC)[9] Typical Output					
0 Hz		0		dB	
2000 Hz		–0.1		dB	
4000 Hz		–0.25		dB	
8000 Hz		–0.6		dB	
12000 Hz		–1.4		dB	
16000 Hz		–2.8		dB	
20000 Hz		–4.5		dB	Channel Frequency Response Is
24000 Hz		–7.0		dB	Programmable by Means of External
28000 Hz		–9.5		dB	Digital Filtering
> 32000 Hz		< –12.5		dB	
LOGIC INPUTS					
V_{INH}, Input High Voltage	V_{DD} – 0.8		V_{DD}	V	
V_{INL}, Input Low Voltage	0		0.8	V	
I_{IH}, Input Current		–0.5		µA	
C_{IN}, Input Capacitance		10		pF	
LOGIC OUTPUT					
V_{OH}, Output High Voltage	V_{DD} – 0.4		V_{DD}	V	$\lvert I_{OUT} \rvert \leq 100$ µA
V_{OL}, Output Low Voltage	0		0.4	V	$\lvert I_{OUT} \rvert \leq 100$ µA
Three-State Leakage Current		–0.3		µA	
POWER SUPPLIES					
AVDD1, AVDD2	4.5		5.5	V	
DVDD	4.5		5.5	V	
I_{DD}[10]					See Table II

NOTES
[1]Operating temperature range is as follows: –40°C to +85°C. Therefore, T_{MIN} = –40°C and T_{MAX} = +85°C.
[2]Test conditions: Input PGA set for 0 dB gain, Output PGA set for 6 dB gain, no load on analog outputs (unless otherwise stated).
[3]At input to sigma-delta modulator of ADC.
[4]Guaranteed by design.
[5]Overall group delay will be affected by the sample rate and the external digital filtering.
[6]The ADC's input impedance is inversely proportional to DMCLK and is approximated by: (4×10^{11})/DMCLK.
[7]Between VOUTP and VOUTN.
[8]At VOUT output.
[9]Frequency responses of ADC and DAC measured with input at audio reference level (the input level that produces an output level of –10 dBm0), with 38 dB preamplifier bypassed and input gain of 0 dB.
[10]Test conditions: no load on digital inputs, analog inputs ac coupled to ground, no load on analog outputs.
Specifications subject to change without notice.

Table II. Current Summary (AVDD = DVDD = +5.5 V)

Conditions	Analog Current	Internal Digital Current	External Interface Current	Total Current	SE	MCLK ON	Comments
ADC On Only	8.5	6	2	16.5	1	YES	REFOUT Disabled
ADC and DAC On	14.5	6	2	22.5	1	YES	REFOUT Disabled
REFCAP On Only	0.8	0	0	1.0	0	NO	REFOUT Disabled
REFCAP and REFOUT On Only	3.5	0	0	3.5	0	NO	
All Sections Off	0	1.5	0	1.7	0	YES	MCLK Active Levels Equal to 0 V and DVDD
All Sections Off	0	0.01	0	0.02	0	NO	Digital Inputs Static and Equal to 0 V or DVDD

The above values are in mA and are typical values unless otherwise noted.

Table III. Signal Ranges

		3 V Power Supply 5VEN = 0	5 V Power Supply 5VEN = 0	5 V Power Supply 5VEN = 1
V_{REFCAP}		1.2 V ± 10%	1.2 V	2.4 V
V_{REFOUT}		1.2 V ± 10%	1.2 V	2.4 V
ADC	Maximum Input Range at V_{IN}	1.578 V p-p	1.578 V p-p	3.156 V p-p
	Nominal Reference Level	1.0954 V p-p	1.0954 V p-p	2.1908 V p-p
DAC	Maximum Voltage Output Swing			
	Single-Ended	1.578 V p-p	1.578 V p-p	3.156 V p-p
	Differential	3.156 V p-p	3.156 V p-p	6.312 V p-p
	Nominal Voltage Output Swing			
	Single-Ended	1.0954 V p-p	1.0954 V p-p	2.1908 V p-p
	Differential	2.1909 V p-p	2.1909 V p-p	4.3818 V p-p
	Output Bias Voltage	V_{REFOUT}	V_{REFOUT}	V_{REFOUT}

TIMING CHARACTERISTICS

(AVDD = +3 V ± 10%; DVDD = +3 V ± 10%; AGND = DGND = 0 V; $T_A = T_{MIN}$ to T_{MAX}, unless otherwise noted)

Parameter	Limit at T_A = –40°C to +85°C	Unit	Description
Clock Signals			See Figure 1
t_1	61	ns min	MCLK Period
t_2	24.4	ns min	MCLK Width High
t_3	24.4	ns min	MCLK Width Low
Serial Port			See Figures 3 and 4
t_4	t_1	ns min	SCLK Period
t_5	$0.4 \times t_1$	ns min	SCLK Width High
t_6	$0.4 \times t_1$	ns min	SCLK Width Low
t_7	20	ns min	SDI/SDIFS Setup Before SCLK Low
t_8	0	ns min	SDI/SDIFS Hold After SCLK Low
t_9	10	ns max	SDOFS Delay from SCLK High
t_{10}	10	ns min	SDOFS Hold After SCLK High
t_{11}	10	ns min	SDO Hold After SCLK High
t_{12}	10	ns max	SDO Delay from SCLK High
t_{13}	30	ns max	SCLK Delay from MCLK

TIMING CHARACTERISTICS (AVDD = +5 V ± 10%; DVDD = +5 V ± 10%; AGND = DGND = 0 V; $T_A = T_{MIN}$ to T_{MAX}, unless otherwise noted)

Parameter	Limit at T_A = –40°C to +85°C	Unit	Description
Clock Signals			See Figure 1
t_1	61	ns min	MCLK Period
t_2	24.4	ns min	MCLK Width High
t_3	24.4	ns min	MCLK Width Low
Serial Port			See Figures 3 and 4
t_4	t_1	ns min	SCLK Period
t_5	$0.4 \times t_1$	ns min	SCLK Width High
t_6	$0.4 \times t_1$	ns min	SCLK Width Low
t_7	20	ns typ	SDI/SDIFS Setup Before SCLK Low
t_8	0	ns typ	SDI/SDIFS Hold After SCLK Low
t_9	10	ns typ	SDOFS Delay from SCLK High
t_{10}	10	ns typ	SDOFS Hold After SCLK High
t_{11}	10	ns typ	SDO Hold After SCLK High
t_{12}	10	ns typ	SDO Delay from SCLK High
t_{13}	30	ns typ	SCLK Delay from MCLK

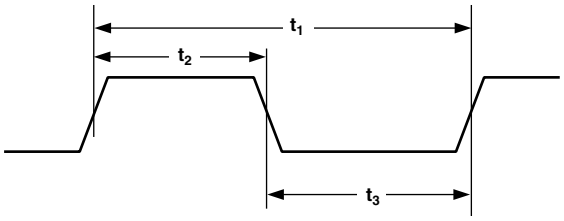

Figure 1. MCLK Timing

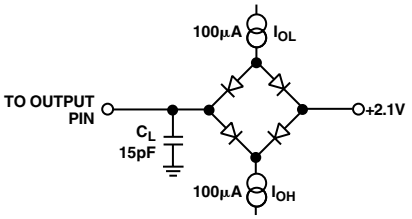

Figure 2. Load Circuit for Timing Specifications

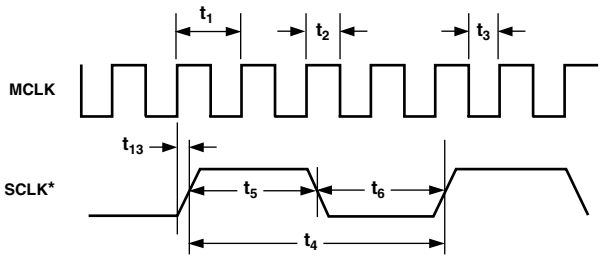

*SCLK IS INDIVIDUALLY PROGRAMMABLE IN FREQUENCY (MCLK/4 SHOWN HERE).

Figure 3. SCLK Timing

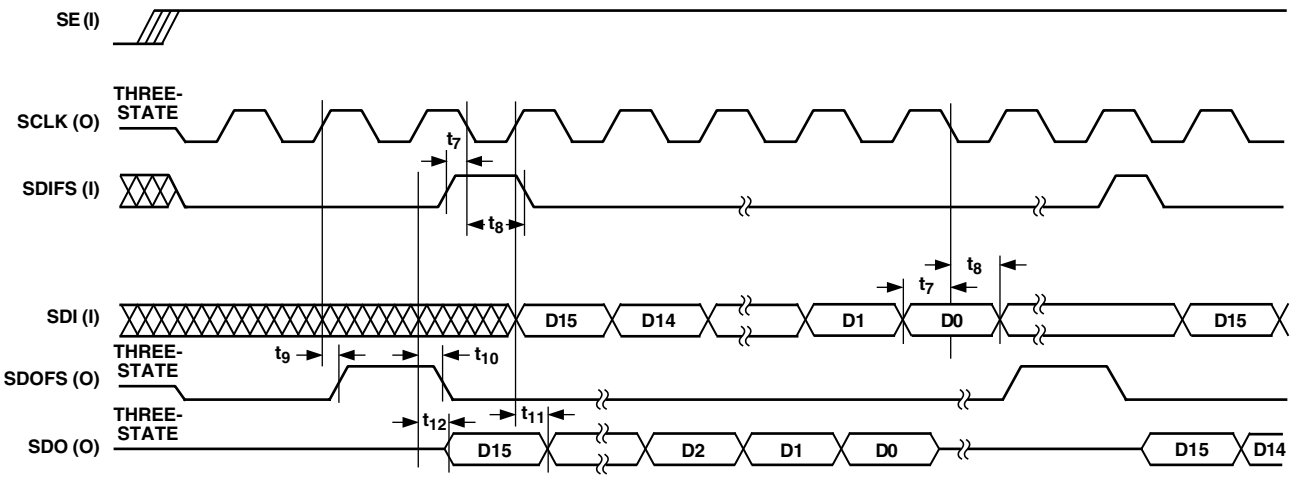

Figure 4. Serial Port (SPORT)

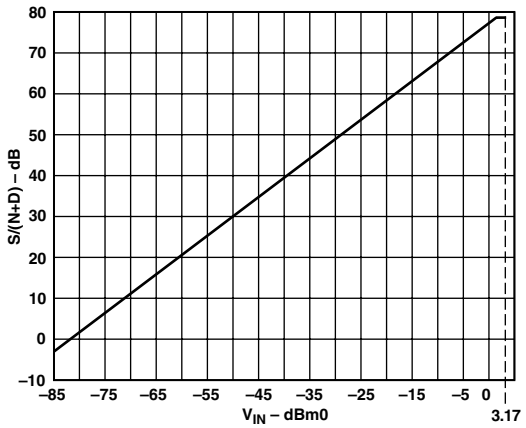

Figure 5a. S/(N+D) vs. V_{IN} (ADC @ 3 V) over Voiceband Bandwidth (300 Hz – 3.4 kHz)

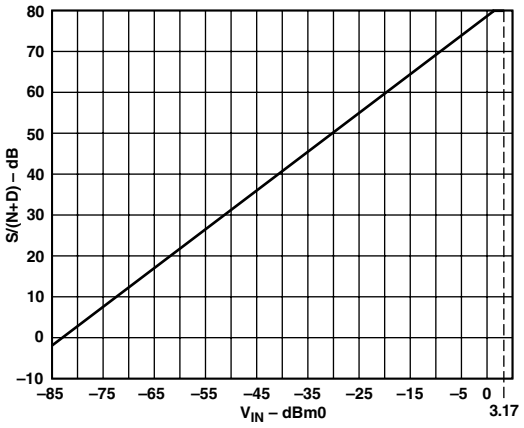

Figure 5c. S/(N+D) vs. V_{IN} (ADC @ 5 V) over Voiceband Bandwidth (300 Hz – 3.4 kHz)

Figure 5b. S/(N+D) vs. V_{IN} (DAC @ 3 V) over Voiceband Bandwidth (300 Hz – 3.4 kHz)

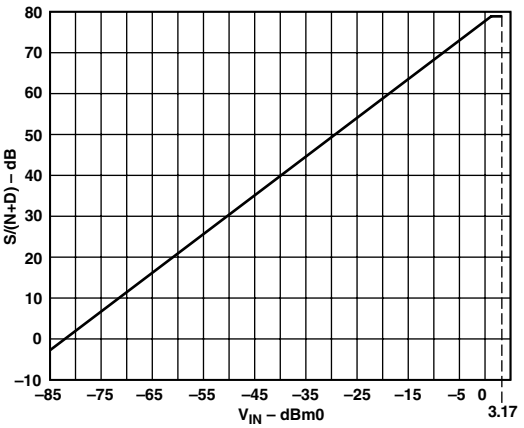

Figure 5d. S/(N+D) vs. V_{IN} (DAC @ 5 V) over Voiceband Bandwidth (300 Hz – 3.4 kHz)

ABSOLUTE MAXIMUM RATINGS*

(T_A = +25°C unless otherwise noted)

AVDD, DVDD to GND . . . . . –0.3 V to +7 V
AGND to DGND . . . . . –0.3 V to +0.3 V
Digital I/O Voltage to DGND . . . . . –0.3 V to DVDD + 0.3 V
Analog I/O Voltage to AGND . . . . . –0.3 V to AVDD + 0.3 V
Operating Temperature Range
Industrial (A Version) . . . . . –40°C to +85°C
Storage Temperature Range . . . . . –65°C to +150°C
Maximum Junction Temperature . . . . . +150°C
SOIC, θ_{JA} Thermal Impedance . . . . . 75°C/W
Lead Temperature, Soldering
Vapor Phase (60 sec) . . . . . +215°C
Infrared (15 sec) . . . . . +220°C
SSOP, θ_{JA} Thermal Impedance . . . . . 90°C/W
Lead Temperature, Soldering
Vapor Phase (60 sec) . . . . . +215°C
Infrared (15 sec) . . . . . +220°C

*Stresses above those listed under Absolute Maximum Ratings may cause permanent damage to the device. This is a stress rating only; functional operation of the device at these or any other conditions above those listed in the operational sections of this specification is not implied. Exposure to absolute maximum rating conditions for extended periods may affect device reliability.

ORDERING GUIDE

Model	Temperature Range	Package Option[1]
AD73311AR	–40°C to +85°C	R-20
AD73311ARS	–40°C to +85°C	RS-20
EVAL-AD73311EB	Evaluation Board[2] +EZ-KIT Lite Upgrade[3]	
EVAL-AD73311EZ	Evaluation Board[2] +EZ-KIT Lite[4]	

NOTES
[1]R = 0.3' Small Outline IC (SOIC), RS = Shrink Small Outline Package (SSOP).
[2]The AD73311 evaluation board features a selectable number of codecs in cascade (from 1 to 4). It can be interfaced to an ADSP-2181 EZ-KIT Lite or to a Texas Instruments EVM kit.
[3]The upgrade consists of a replacement PROM and connector. This option is intended for existing owners of EZ-KIT Lite.
[4]The EZ-KIT Lite has been modified to allow it to interface with the AD73311 evaluation board. This option is intended for users who do not already have an EZ-KIT Lite.

CAUTION

ESD (electrostatic discharge) sensitive device. Electrostatic charges as high as 4000 V readily accumulate on the human body and test equipment and can discharge without detection. Although the AD73311 features proprietary ESD protection circuitry, permanent damage may occur on devices subjected to high energy electrostatic discharges. Therefore, proper ESD precautions are recommended to avoid performance degradation or loss of functionality.

PIN CONFIGURATION

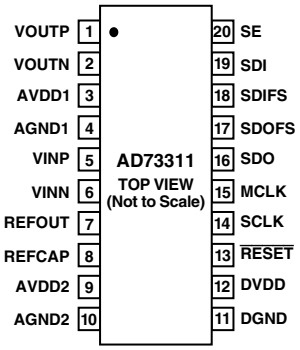

PIN FUNCTION DESCRIPTIONS

Pin Number	Mnemonic	Function
1	VOUTP	Analog Output from the Positive Terminal of the Output Channel.
2	VOUTN	Analog Output from the Negative Terminal of the Output Channel.
3	AVDD1	Analog Power Supply Connection for the Output Driver.
4	AGND1	Analog Ground Connection for the Output Driver.
5	VINP	Analog Input to the Positive Terminal of the Input Channel.
6	VINN	Analog Input to the Negative Terminal of the Input Channel.
7	REFOUT	Buffered Reference Output, which has a nominal value of 1.2 V or 2.4 V, the value being dependent on the status of Bit 5VEN (CRC:7).
8	REFCAP	A Bypass Capacitor to AGND2 of 0.1 μF is required for the on-chip reference. The capacitor should be fixed to this pin.
9	AVDD2	Analog Power Supply Connection.
10	AGND2	Analog Ground/Substrate Connection.
11	DGND	Digital Ground/Substrate Connection.
12	DVDD	Digital Power Supply Connection.
13	$\overline{\text{RESET}}$	Active Low Reset Signal. This input resets the entire chip, resetting the control registers and clearing the digital circuitry.
14	SCLK	Output Serial Clock whose rate determines the serial transfer rate to/from the codec. It is used to clock data or control information to and from the serial port (SPORT). The frequency of SCLK is equal to the frequency of the master clock (MCLK) divided by an integer number—this integer number being the product of the external master clock rate divider and the serial clock rate divider.
15	MCLK	Master Clock Input. MCLK is driven from an external clock signal.
16	SDO	Serial Data Output of the Codec. Both data and control information may be output on this pin and is clocked on the positive edge of SCLK. SDO is in three-state when no information is being transmitted and when SE is low.
17	SDOFS	Framing Signal Output for SDO Serial Transfers. The frame sync is one-bit wide and it is active one SCLK period before the first bit (MSB) of each output word. SDOFS is referenced to the positive edge of SCLK. SDOFS is in three-state when SE is low.
18	SDIFS	Framing Signal Input for SDI Serial Transfers. The frame sync is one-bit wide and it is valid one SCLK period before the first bit (MSB) of each input word. SDIFS is sampled on the negative edge of SCLK and is ignored when SE is low.
19	SDI	Serial Data Input of the Codec. Both data and control information may be input on this pin and are clocked on the negative edge of SCLK. SDI is ignored when SE is low.
20	SE	SPORT Enable. Asynchronous input enable pin for the SPORT. When SE is set low by the DSP, the output pins of the SPORT are three-stated and the input pins are ignored. SCLK is also disabled internally in order to decrease power dissipation. When SE is brought high, the control and data registers of the SPORT are at their original values (before SE was brought low), however the timing counters and other internal registers are at their reset values.

TERMINOLOGY

Absolute Gain

Absolute gain is a measure of converter gain for a known signal. Absolute gain is measured (differentially) with a 1 kHz sine wave at 0 dBm0 for the DAC and with a 1 kHz sine wave at 0 dBm0 for the ADC. The absolute gain specification is used for gain tracking error specification.

Crosstalk

Crosstalk is due to coupling of signals from a given channel to an adjacent channel. It is defined as the ratio of the amplitude of the coupled signal to the amplitude of the input signal. Crosstalk is expressed in dB.

Gain Tracking Error

Gain tracking error measures changes in converter output for different signal levels relative to an absolute signal level. The absolute signal level is 0 dBm0 (equal to absolute gain) at 1 kHz for the DAC and 0 dBm0 (equal to absolute gain) at 1 kHz for the ADC. Gain tracking error at 0 dBm0 (ADC) and 0 dBm0 (DAC) is 0 dB by definition.

Group Delay

Group Delay is defined as the derivative of radian phase with respect to radian frequency, dø(f)/df. Group delay is a measure of average delay of a system as a function of frequency. A linear system with a constant group delay has a linear phase response. The deviation of group delay from a constant indicates the degree of nonlinear phase response of the system.

Idle Channel Noise

Idle channel noise is defined as the total signal energy measured at the output of the device when the input is grounded (measured in the frequency range 300 Hz–3400 Hz).

Intermodulation Distortion

With inputs consisting of sine waves at two frequencies, fa and fb, any active device with nonlinearities will create distortion products at sum and difference frequencies of mfa ± nfb where m, n = 0, 1, 2, 3, etc. Intermodulation terms are those for which neither m nor n are equal to zero. For final testing, the second order terms include (fa + fb) and (fa – fb), while the third order terms include (2fa + fb), (2fa – fb), (fa + 2fb) and (fa – 2fb).

Power Supply Rejection

Power supply rejection measures the susceptibility of a device to noise on the power supply. Power supply rejection is measured by modulating the power supply with a sine wave and measuring the noise at the output (relative to 0 dB).

Sample Rate

The sample rate is the rate at which the ADC updates its output register and the DAC updates its output from its input register. It is fixed relative to the DMCLK (= DMCLK/256) and therefore may only be changed by changing the DMCLK.

SNR+THD

Signal-to-noise ratio plus harmonic distortion is defined to be the ratio of the rms value of the measured input signal to the rms sum of all other spectral components in the frequency range 300 Hz–3400 Hz, including harmonics but excluding dc.

ABBREVIATIONS

ADC	Analog-to-Digital Converter.
ALB	Analog Loop-Back.
BW	Bandwidth.
CRx	A Control Register where *x* is a placeholder for an alphabetic character (A–E). There are five read/write control registers on the AD73311—designated CRA through CRE.
CRx:n	A bit position, where *n* is a placeholder for a numeric character (0–7), within a control register; where *x* is a placeholder for an alphabetic character (A–E). Position 7 represents the MSB and Position 0 represents the LSB.
DAC	Digital-to-Analog Converter.
DLB	Digital Loop-Back.
DMCLK	Device (Internal) Master Clock. This is the internal master clock resulting from the external master clock (MCLK) being divided by the on-chip master clock divider.
FSLB	Frame Sync Loop Back—where the SDOFS of the final device in a cascade is connected to the RFS and TFS of the DSP and the SDIFS of first device in the cascade. Data input and output occur simultaneously. In the case of Non-FSLB, SDOFS and SDO are connected to the Rx Port of the DSP while SDIFS and SDI are connected to the Tx Port.
PGA	Programmable Gain Amplifier.
SC	Switched Capacitor.
SNR	Signal-to-Noise Ratio.
SPORT	Serial Port.
THD	Total Harmonic Distortion.
VBW	Voice Bandwidth.

FUNCTIONAL DESCRIPTION

Encoder Channel

The encoder channel consists of a switched capacitor PGA and a sigma-delta analog-to-digital converter (ADC). An on-board digital filter, which forms part of the sigma-delta ADC, also performs critical system-level filtering. Due to the high level of oversampling, the input antialias requirements are reduced such that a simple single pole RC stage is sufficient to give adequate attenuation in the band of interest.

Programmable Gain Amplifier

The encoder section's analog front end comprises a switched capacitor PGA which also forms part of the sigma-delta modulator. The SC sampling frequency is DMCLK/8. The PGA, whose programmable gain settings are shown in Table IV, may be used to increase the signal level applied to the ADC from low output sources such as microphones, and can be used to avoid placing external amplifiers in the circuit. The input signal level to the sigma-delta modulator should not exceed the maximum input voltage permitted.

The PGA gain is set by bits IGS0, IGS1 and IGS2 (CRD:0–2) in control register D.

Table IV. PGA Settings for the Encoder Channel

IGS2	IGS1	IGS0	Gain (dB)
0	0	0	0
0	0	1	6
0	1	0	12
0	1	1	18
1	0	0	20
1	0	1	26
1	1	0	32
1	1	1	38

ADC

The ADC consists of an analog sigma-delta modulator and a digital antialiasing decimation filter. The sigma-delta modulator noise-shapes the signal and produces 1-bit samples at a DMCLK/8 rate. This bit-stream, representing the analog input signal, is input to the antialiasing decimation filter. The decimation filter reduces the sample rate and increases the resolution.

Analog Sigma-Delta Modulator

The AD73311 input channel employs a sigma-delta conversion technique, which provides a high resolution 16-bit output with system filtering being implemented on-chip.

Sigma-delta converters employ a technique known as oversampling where the sampling rate is many times the highest frequency of interest. In the case of the AD73311, the initial sampling rate of the sigma-delta modulator is DMCLK/8. The main effect of oversampling is that the quantization noise is spread over a very wide bandwidth, up to $F_S/2$ = DMCLK/16 (Figure 6a). This means that the noise in the band of interest is much reduced.

Another complementary feature of sigma-delta converters is the use of a technique called noise-shaping. This technique has the effect of pushing the noise from the band of interest to an out-of-band position (Figure 6b). The combination of these techniques, followed by the application of a digital filter, reduces the noise in band sufficiently to ensure good dynamic performance from the part (Figure 6c).

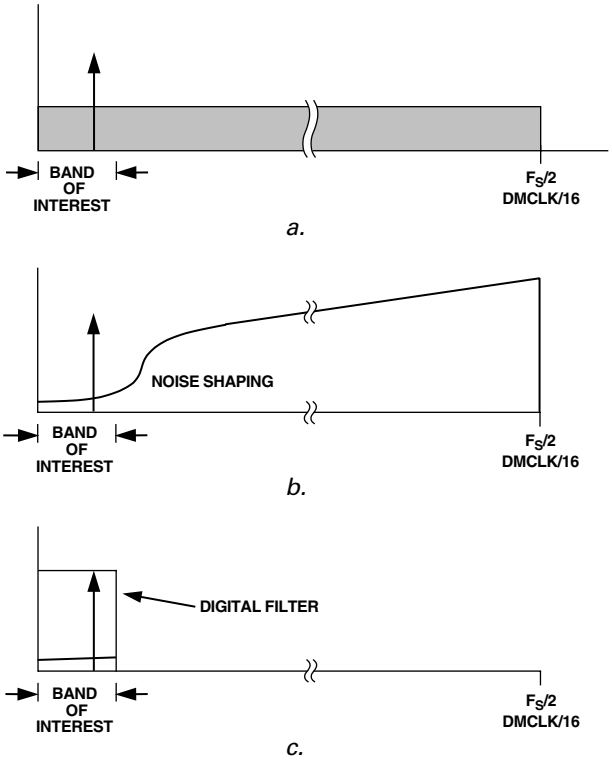

Figure 6. Sigma-Delta Noise Reduction

Figure 7 shows the various stages of filtering that are employed in a typical AD73311 application. In Figure 7a we see the transfer function of the external analog antialias filter. Even though it is a single RC pole, its cutoff frequency is sufficiently far away from the initial sampling frequency (DMCLK/8) that it takes care of any signals that could be aliased by the sampling frequency. This also shows the major difference between the initial oversampling rate and the bandwidth of interest. In Figure 7b, the signal and noise shaping responses of the sigma-delta modulator are shown. The signal response provides further rejection of any high frequency signals while the noise shaping will push the inherent quantization noise to an out-of-band position. The detail of Figure 7c shows the response of the digital decimation filter (Sinc-cubed response) with nulls every multiple of DMCLK/256, which is the decimation filter update rate. The final detail in Figure 7d shows the application of a final antialias filter in the DSP engine. This has the advantage of being implemented according to the user's requirements and available MIPS. The filtering in Figures 7a through 7c is implemented in the AD73311.

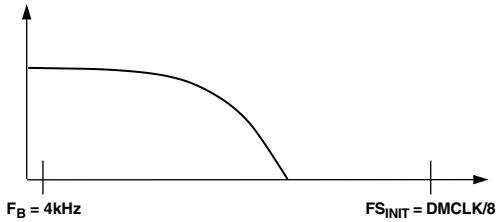

a. Analog Antialias Filter Transfer Function

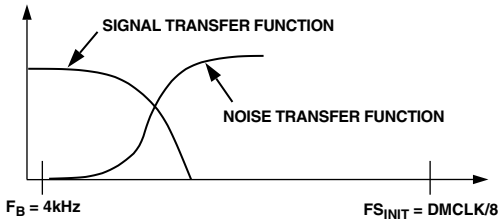

b. Analog Sigma-Delta Modulator Transfer Function

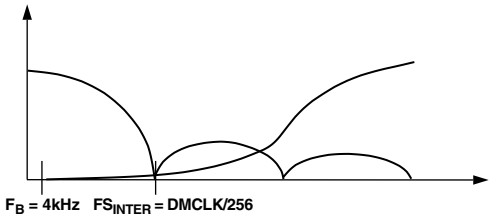

c. Digital Decimator Transfer Function

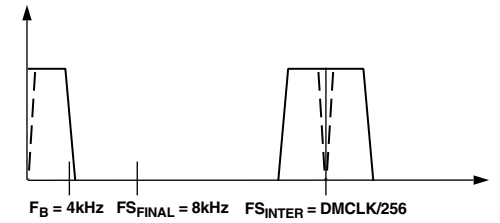

d. Final Filter LPF (HPF) Transfer Function

Figure 7. AD73311 ADC Frequency Responses

Decimation Filter

The digital filter used in the AD73311 carries out two important functions. Firstly, it removes the out-of-band quantization noise, which is shaped by the analog modulator and secondly, it decimates the high frequency bit-stream to a lower rate 15-bit word.

The antialiasing decimation filter is a sinc-cubed digital filter that reduces the sampling rate from DMCLK/8 to DMCLK/256, and increases the resolution from a single bit to 15 bits. Its Z transform is given as: $[(1–Z^{–32})/(1–Z^{–1})]^3$. This ensures a minimal group delay of 25 µs.

ADC Coding

The ADC coding scheme is in twos complement format (see Figure 8). The output words are formed by the decimation filter, which grows the word length from the single-bit output of the sigma-delta modulator to a 15-bit word, which is the final output of the ADC block. In 16-bit Data Mode this value is left shifted with the LSB being set to 0. For input values equal to or greater than positive full scale, however, the output word is set at 0x7FFF, which has the LSB set to 1. In mixed Control/Data Mode, the resolution is fixed at 15 bits, with the MSB of the 16-bit transfer being used as a flag bit to indicate either control or data in the frame.

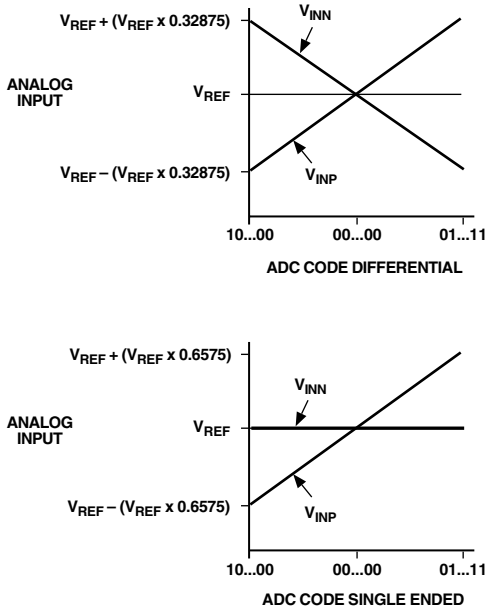

Figure 8. ADC Transfer Function

Decoder Channel

The decoder channel consists of a digital interpolator, digital sigma-delta modulator, a single bit digital-to-analog converter (DAC), an analog smoothing filter and a programmable gain amplifier with differential output.

DAC Coding

The DAC coding scheme is in twos complement format with 0x7FFF being full-scale positive and 0x8000 being full-scale negative.

Interpolation Filter

The anti-imaging interpolation filter is a sinc-cubed digital filter which up-samples the 16-bit input words from a rate of DMCLK/256 to a rate of DMCLK/8 while filtering to attenuate images produced by the interpolation process. Its Z transform is given as: $[(1–Z^{–32})/(1–Z^{–1})]^3$. The DAC receives 16-bit samples from the host DSP processor at a rate of DMCLK/256. If the host processor fails to write a new value to the serial port, the existing (previous) data is read again. The data stream is filtered by the anti-imaging interpolation filter, but there is an option to bypass the interpolator for the minimum group delay configuration by setting the IBYP bit (CRE:5) of Control register E. The interpolation filter has the same characteristics as the ADC's antialiasing decimation filter.

The output of the interpolation filter is fed to the DAC's digital sigma-delta modulator, which converts the 16-bit data to 1-bit samples at a rate of DMCLK/8. The modulator noise-shapes the signal so that errors inherent to the process are minimized in the passband of the converter. The bit-stream output of the sigma-delta modulator is fed to the single bit DAC where it is converted to an analog voltage.

Analog Smoothing Filter & PGA

The output of the single-bit DAC is sampled at DMCLK/8, therefore it is necessary to filter the output to reconstruct the low frequency signal. The decoder's analog smoothing filter consists of a continuous-time filter preceded by a third-order switched-capacitor filter. The continuous-time filter forms part of the output programmable gain amplifier (PGA). The PGA can be used to adjust the output signal level from –15 dB to +6 dB in 3 dB steps, as shown in Table V. The PGA gain is set by bits OGS0, OGS1 and OGS2 (CRD:4-6) in Control Register D.

Table V. PGA Settings for the Decoder Channel

OG2	OG1	OG0	Gain (dB)
0	0	0	+6
0	0	1	+3
0	1	0	0
0	1	1	–3
1	0	0	–6
1	0	1	–9
1	1	0	–12
1	1	1	–15

Differential Output Amplifiers

The decoder has a differential analog output pair (VOUTP and VOUTN). The output channel can be muted by setting the MUTE bit (CRD:7) in Control Register D. The output signal is dc-biased to the codec's on-chip voltage reference.

Voltage Reference

The AD73311 reference, REFCAP, is a bandgap reference that provides a low noise, temperature-compensated reference to the DAC and ADC. A buffered version of the reference is also made available on the REFOUT pin and can be used to bias other external analog circuitry. The reference has a default nominal value of 1.2 V but can be set to a nominal value of 2.4 V by setting the 5VEN bit (CRC:7) of CRC. The 5 V mode is generally only usable when V_{DD} = 5 V.

The reference output (REFOUT) can be enabled for biasing external circuitry by setting the RU bit (CRC:6) of CRC.

Serial Port (SPORT)

The codec communicates with a host processor via the bidirectional synchronous serial port (SPORT) which is compatible with most modern DSPs. The SPORT is used to transmit and receive digital data and control information.

In both transmit and receive modes, data is transferred at the serial clock (SCLK) rate with the MSB being transferred first. Due to the fact that the SPORT uses a common serial register for serial input and output, communications between an AD73311 codec and a host processor (DSP engine) must always be initiated by the codec itself. This ensures that there is no danger of the information being sent to the codec being corrupted by ADC samples being output by the codec.

SPORT Overview

The AD73311 SPORT is a flexible, full-duplex, synchronous serial port whose protocol has been designed to allow up to eight AD73311 devices to be connected, in cascade, to a single DSP via a six-wire interface. It has a very flexible architecture that can be configured by programming two of the internal control registers. The AD73311 SPORT has three distinct modes of operation: Control Mode, Data Mode and Mixed Control/Data Mode.

In Control Mode (CRA:0 = 0), the device's internal configuration can be programmed by writing to the five internal control registers. In this mode, control information can be written to or read from the codec. In Data Mode (CRA:0 = 1), information that is sent to the device is used to update the decoder section (DAC), while the encoder section (ADC) data is read from the device. In this mode, only DAC and ADC data is written to or read from the device. Mixed mode (CRA:0 = 1 and CRA:1 = 1) allows the user to choose whether the information being sent to the device contains either control information or DAC data. This is achieved by using the MSB of the 16-bit frame as a flag bit. Mixed mode reduces the resolution to 15 bits with the MSB being used to indicate whether the information in the 16-bit frame is control information or DAC/ADC data.

The SPORT features a single 16-bit serial register that is used for both input and output data transfers. As the input and output data must share the same register there are some precautions that must be observed. The primary precaution is that no information must be written to the SPORT without reference to an output sample event, which is when the serial register will be overwritten with the latest ADC sample word. Once the SPORT starts to output the latest ADC word then it is safe for the DSP to write new control or data words to the codec. In certain configurations, data can be written to the device to coincide with the output sample being shifted out of the serial register—see section on interfacing devices. The serial clock rate (CRB:2–3) defines how many 16-bit words can be written to a device before the next output sample event will happen.

The SPORT block diagram, shown in Figure 9, details the five control registers (A–E), external MCLK to internal DMCLK divider and serial clock divider. The divider rates are controlled by the setting of Control Register B. The AD73311 features a master clock divider that allows users the flexibility of dividing externally available high frequency DSP or CPU clocks to generate a lower frequency master clock internally in the codec which may be more suitable for either serial transfer or sampling rate requirements. The master clock divider has five divider options (÷1 default condition, ÷2, ÷3, ÷4, ÷5) that are set by loading the master clock divider field in Register B with the appropriate code. Once the internal device master clock (DMCLK) has been set using the master clock divider, the sample rate and serial clock settings are derived from DMCLK.

The SPORT can work at four different serial clock (SCLK) rates: chosen from DMCLK, DMCLK/2, DMCLK/4 or DMCLK/8, where DMCLK is the internal or device master clock resulting from the external or pin master clock being divided by the master clock divider. When working at the lower SCLK rate of DMCLK/8, which is intended for interfacing with slower DSPs, the SPORT will support a maximum of two devices in cascade with the sample rate of DMCLK/256.

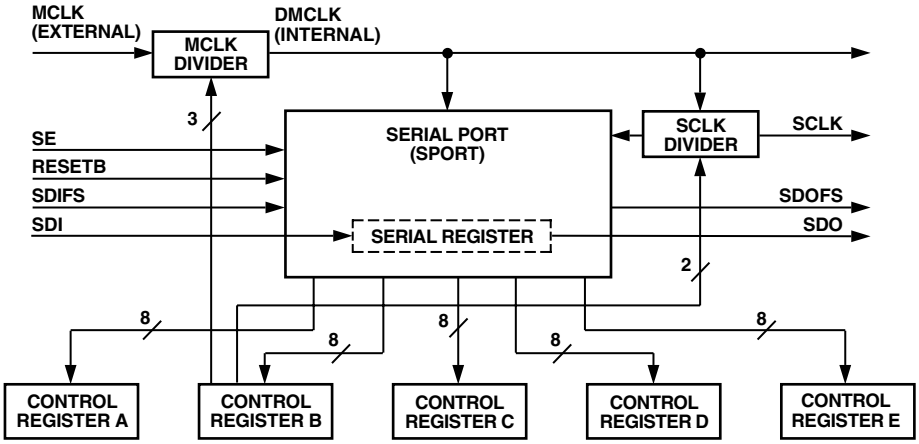

Figure 9. SPORT Block Diagram

SPORT Register Maps

There are two register banks for the AD73311: the control register bank and the data register bank. The control register bank consists of five read/write registers, each 8 bits wide. Table IX shows the control register map for the AD73311. The first two control registers, CRA and CRB, are reserved for controlling the SPORT. They hold settings for parameters such as bit rate, internal master clock rate and device count (used when more than one AD73311 is connected in cascade from a single SPORT). The other three registers; CRC, CRD and CRE are used to hold control settings for the ADC, DAC, Reference and Power Control sections of the device. Control registers are written to on the negative edge of SCLK. The data register bank consists of two 16-bit registers that are the DAC and ADC registers.

Master Clock Divider

The AD73311 features a programmable master clock divider that allows the user to reduce an externally available master clock, at pin MCLK, by one of the ratios 1, 2, 3, 4 or 5 to produce an internal master clock signal (DMCLK) that is used to calculate the sampling and serial clock rates. The master clock divider is programmable by setting CRB:4-6. Table VI shows the division ratio corresponding to the various bit settings. The default divider ratio is divide by one.

Table VI. DMCLK (Internal) Rate Divider Settings

MCD2	MCD1	MCD0	DMCLK Rate
0	0	0	MCLK
0	0	1	MCLK/2
0	1	0	MCLK/3
0	1	1	MCLK/4
1	0	0	MCLK/5
1	0	1	MCLK
1	1	0	MCLK
1	1	1	MCLK

Serial Clock Rate Divider

The AD73311 features a programmable serial clock divider that allows users to match the serial clock (SCLK) rate of the data to that of the DSP engine or host processor. The maximum SCLK rate available is DMCLK and the other available rates are: DMCLK/2, DMCLK/4 and DMCLK/8. The slowest rate (DMCLK/8) is the default SCLK rate. The serial clock divider is programmable by setting bits CRB:2–3. Table VII shows the serial clock rate corresponding to the various bit settings.

Table VII. SCLK Rate Divider Settings

SCD1	SCD0	SCLK Rate
0	0	DMCLK/8
0	1	DMCLK/4
1	0	DMCLK/2
1	1	DMCLK

DAC Advance Register

The loading of the DAC is internally synchronized with the unloading of the ADC data in each sampling interval. The default DAC load event happens one SCLK cycle before the SDOFS flag is raised by the ADC data being ready. However, this DAC load position can be advanced before this time by modifying the contents of the DAC Advance field in Control Register E (CRE:0–4). The field is five-bits wide, allowing 31 increments of weight 1/(DMCLK/8); see Table VIII. In certain circumstances this can reduce the group delay when the ADC and DAC are used to process data in series. Appendix E details how the DAC advance feature can be used.

NOTE: The DAC advance register should be changed before the DAC section is powered up.

Table VIII. DAC Timing Control

DA4	DA3	DA2	DA1	DA0	Time Advance*
0	0	0	0	0	0 ns
0	0	0	0	1	488.2 ns
0	0	0	1	0	976.5 ns
—	—	—	—	—	—
1	1	1	1	0	14.64 µs
1	1	1	1	1	15.13 µs

*DMCLK = 16.384 MHz.

Table IX. Control Register Map

Address (Binary)	Name	Description	Type	Width	Reset Setting (Hex)
000	CRA	Control Register A	R/W	8	0x00
001	CRB	Control Register B	R/W	8	0x00
010	CRC	Control Register C	R/W	8	0x00
011	CRD	Control Register D	R/W	8	0x00
100	CRE	Control Register E	R/W	8	0x00
101 to 111		Reserved			

OPERATION

Resetting the AD73311

The pin $\overline{\text{RESET}}$ resets all the control registers. All registers are reset to zero indicating that the default SCLK rate (DMCLK/8) and sample rate (DMCLK/2048) are at a minimum to ensure that slow speed DSP engines can communicate effectively. As well as resetting the control registers using the $\overline{\text{RESET}}$ pin, the device can be reset using the RESET bit (CRA:7) in Control Register A. Both hardware and software resets require 4 DMCLK cycles. On reset, DATA/$\overline{\text{PGM}}$ (CRA:0) is set to 0 (default condition) thus enabling Program Mode. The reset conditions ensure that the device must be programmed to the correct settings after power-up or reset. Following a reset, the SDOFS will be asserted 280 DMCLK cycles after $\overline{\text{RESET}}$ going high. The data that is output following $\overline{\text{RESET}}$ and during Program Mode is random and contains no valid information until either data or mixed mode is set.

Power Management

The individual functional blocks of the AD73311 can be enabled separately by programming the power control register CRC. It allows certain sections to be powered down if not required, which adds to the device's flexibility in that the user need not incur the penalty of having to provide power for a certain section if it is not necessary to their design. The power control register provides individual control settings for the major functional blocks and also a global override that allows all sections to be powered up by setting the bit. Using this method the user could, for example, individually enable a certain section, such as the reference (CRC:5), and disable all others. The global power-up (CRC:0) can be used to enable all sections but if power-down is required using the global control, the reference will still be enabled, in this case, because its individual bit is set. Refer to Table XIII for details of the settings of CRC.

Operating Modes

There are five operating modes available on the AD73311. Two of these—Analog Loop-Back and Digital Loop-Back—are reserved as diagnostic modes with the other three, Program, Data and Mixed Program/Data, being available for general purpose use. The device configuration—register settings—can be changed only in Program and Mixed Program/Data Modes. In all modes, transfers of information to or from the device occur in 16-bit packets, therefore the DSP engine's SPORT will be programmed for 16-bit transfers.

Table X. Control Word Description

15	14	13	12	11	10	9	8	7	6	5	4	3	2	1	0
C/$\overline{\text{D}}$	R/$\overline{\text{W}}$	DEVICE ADDRESS			REGISTER ADDRESS			REGISTER DATA							

Control	Frame	Description
Bit 15	Control/$\overline{\text{Data}}$	When set high, it signifies a control word in Program or Mixed Program/Data Modes. When set low, it signifies a data word in Mixed Program/Data Mode or an invalid control word in Program Mode.
Bit 14	Read/$\overline{\text{Write}}$	When set low, it tells the device that the data field is to be written to the register selected by the register field setting provided the address field is zero. When set high, it tells the device that the selected register is to be written to the data field in the input serial register and that the new control word is to be output from the device via the serial output.
Bits 13–11	Device Address	This 3-bit field holds the address information. Only when this field is zero is a device selected. If the address is not zero, it is decremented and the control word is passed out of the device via the serial output.
Bits 10–8	Register Address	This 3-bit field is used to select one of the five control registers on the AD73311.
Bits 7–0	Register Data	This 8-bit field holds the data that is to be written to or read from the selected register provided the address field is zero.

Table XI. Control Register A Description

CONTROL REGISTER A

7	6	5	4	3	2	1	0
RESET	DC2	DC1	DC0	DLB	ALB	MM	DATA/$\overline{\text{PGM}}$

Bit	Name	Description
0	DATA/$\overline{\text{PGM}}$	Operating Mode (0 = Program; 1 = Data Mode)
1	MM	Mixed Mode (0 = Off; 1 = Enabled)
2	ALB	Analog Loop-Back Mode (0 = Off; 1 = Enabled)
3	DLB	Digital Loop-Back Mode (0 = Off; 1 = Enabled)
4	DC0	Device Count (Bit 0)
5	DC1	Device Count (Bit 1)
6	DC2	Device Count (Bit 2)
7	RESET	Software Reset (0 = Off; 1 = Initiates Reset)

Table XII. Control Register B Description

CONTROL REGISTER B

7	6	5	4	3	2	1	0
CEE	MCD2	MCD1	MCD0	SCD1	SCD0	1	1

Bit	Name	Description
0	Reserved	Must Be Programmed to 1
1	Reserved	Must Be Programmed to 1
2	SCD0	Serial Clock Divider (Bit 0)
3	SCD1	Serial Clock Divider (Bit 1)
4	MCD0	Master Clock Divider (Bit 0)
5	MCD1	Master Clock Divider (Bit 1)
6	MCD2	Master Clock Divider (Bit 2)
7	CEE	Control Echo Enable (0 = Off; 1 = Enabled)

Table XIII. Control Register C Description

CONTROL REGISTER C

7	6	5	4	3	2	1	0
5VEN	RU	PUREF	PUDAC	PUADC	0	0	PU

Bit	Name	Description
0	PU	Power-Up Device (0 = Power Down; 1 = Power On)
1	Reserved	Must Be Programmed to 0
2	Reserved	Must Be Programmed to 0
3	PUADC	ADC Power (0 = Power Down; 1 = Power On)
4	PUDAC	DAC Power (0 = Power Down; 1 = Power On)
5	PUREF	REF Power (0 = Power Down; 1 = Power On)
6	RU	REFOUT Use (0 = Disable REFOUT; 1 = Enable REFOUT)
7	5VEN	Enable 5 V Operating Mode (0 = Disable 5 V Mode; 1 = Enable 5 V Mode)

Table XIV. Control Register D Description

CONTROL REGISTER D

7	6	5	4	3	2	1	0
MUTE	**OGS2**	**OGS1**	**OGS0**	**RMOD**	**IGS2**	**IGS1**	**IGS0**

Bit	Name	Description
0	IGS0	Input Gain Select (Bit 0)
1	IGS1	Input Gain Select (Bit 1)
2	IGS2	Input Gain Select (Bit 2)
3	RMOD	Reset ADC Modulator (0 = Off; 1 = Reset Enabled)
4	OGS0	Output Gain Select (Bit 0)
5	OGS1	Output Gain Select (Bit 1)
6	OGS2	Output Gain Select (Bit 2)
7	MUTE	Output Mute (0 = Mute Off; 1 = Mute Enabled)

Table XV. Control Register E Description

CONTROL REGISTER E

7	6	5	4	3	2	1	0
0	**0**	**IBYP**	**DA4**	**DA3**	**DA2**	**DA1**	**DA0**

Bit	Name	Description
0	DA0	DAC Advance Setting (Bit 0)
1	DA1	DAC Advance Setting (Bit 1)
2	DA2	DAC Advance Setting (Bit 2)
3	DA3	DAC Advance Setting (Bit 3)
4	DA4	DAC Advance Setting (Bit 4)
5	IBYP	Interpolator Bypass (0 = Bypass Disabled; 1 = Bypass Enabled)
6	Reserved	Must Be Programmed to 0
7	Reserved	Must Be Programmed to 0

Program (Control) Mode

In Program Mode, CRA:0 = 0, the user writes to the control registers to set up the device for desired operation—SPORT operation, cascade length, power management, input/output gain, etc. In this mode, the 16-bit information packet sent to the device by the DSP engine is interpreted as a control word whose format is shown in Table X. In this mode, the user must address the device to be programmed using the address field of the control word. This field is read by the device and if it is zero (000 bin) then the device recognizes the word as being addressed to it. If the address field is not zero, it is then decremented and the control word is passed out of the device—either to the next device in a cascade or back to the DSP engine. This 3-bit address format allows the user to uniquely address any one of up to eight devices in a cascade; please note that this addressing scheme is valid only in sending control information to the device —a different format is used to send DAC data to the device(s). In a single codec configuration, all control word addresses must be zero, otherwise they will not be recognized; in a multi-codec configuration all addresses from zero to N-1 (where *N* = number of devices in cascade) are valid.

Following reset, when the SE pin is enabled, the codec responds by raising the SDOFS pin to indicate that an output sample event has occurred. Control words can be written to the device to coincide with the data being sent out of the SPORT, as shown in Figure 10, or they can lag the output words by a time interval that should not exceed the sample interval. After reset, output frame sync pulses will occur at a slower default sample rate, which is DMCLK/2048, until Control Register B is programmed after which the SDOFS pulses will revert to the DMCLK/256 rate. This is to allow slow controller devices to establish communication with the AD73311. During Program Mode, the data output by the device is random and should not be interpreted as ADC data.

Data Mode

Once the device has been configured by programming the correct settings to the various control registers, the device may exit Program Mode and enter Data Mode. This is done by programming the DATA/$\overline{\text{PGM}}$ (CRA:0) bit to a 1 and MM (CRA:1) to 0. Once the device is in Data Mode, the 16-bit input data frame is now interpreted as DAC data rather than a control frame. This data is therefore loaded directly to the DAC register. In Data Mode, as the entire input data frame contains DAC data, the device relies on counting the number of input frame syncs received at the SDIFS pin. When that number equals the device count stored in the device count field of CRA, the device knows that the present data frame being received is its own DAC update data. When the device is in normal Data Mode (i.e., mixed mode disabled), it must receive a hardware reset to reprogram any of the control register settings. In a single codec configuration, each 16-bit data frame sent from the DSP to the device is interpreted as DAC data. The default device count is 1, therefore each input frame sync will cause the 16-bit data frame to be loaded to the DAC register.

Appendix A details the initialization and operation of a single codec in normal Data Mode, while Appendix C details the initialization and operation of a dual codec cascade in normal Data Mode.

Mixed Program/Data Mode

This mode allows the user to send control words to the device along with the DAC data. This permits adaptive control of the device whereby control of the input/output gains can be effected by interleaving control words along with the normal flow of DAC data. The standard data frame remains 16 bits, but now the MSB is used as a flag bit to indicate whether the remaining 15 bits of the frame represent DAC data or control information. In the case of DAC data, the 15 bits are loaded with MSB justification and LSB set to 0 to the DAC register. Mixed mode is enabled by setting the MM bit (CRA:1) to 1 and the DATA/$\overline{\text{PGM}}$ bit (CRA:0) to 1. In the case where control setting changes will be required during normal operation, this mode allows the ability to load both control and data information with the slight inconvenience of formatting the data. Note that the output samples from the ADC will also have the MSB set to zero to indicate it is a data word.

A description of a single device operating in mixed mode is detailed in Appendix B, while Appendix D details the initialization and operation of a dual codec cascade operating in mixed mode. Note that it is not essential to load the control registers in Program Mode before setting mixed mode active. It is also possible to initiate mixed mode by programming CRA with the first control word and then interleaving control words with DAC data.

Analog Loop-Back

This mode can be used for diagnostic purposes and allows the user to feed the ADC samples from the ADC register directly to the DAC register. This forms a loop-back of the analog input to the analog output by reconstructing the encoded signal using the decoder channel. The serial interface will continue to work, which allows the user to control gain settings, etc. Only when ALB is enabled with mixed mode operation can the user disable the ALB, otherwise the device must be reset.

Digital Loop-Back

This mode allows the user to verify the DSP interfacing and connection by writing words to the SPORT of the devices and have them returned back unchanged after a delay of 16 SCLK cycles. The frame sync and data word that are sent to the device are returned via the output port. Again, DLB mode can only be disabled when used in conjunction with mixed mode, otherwise the device must be reset.

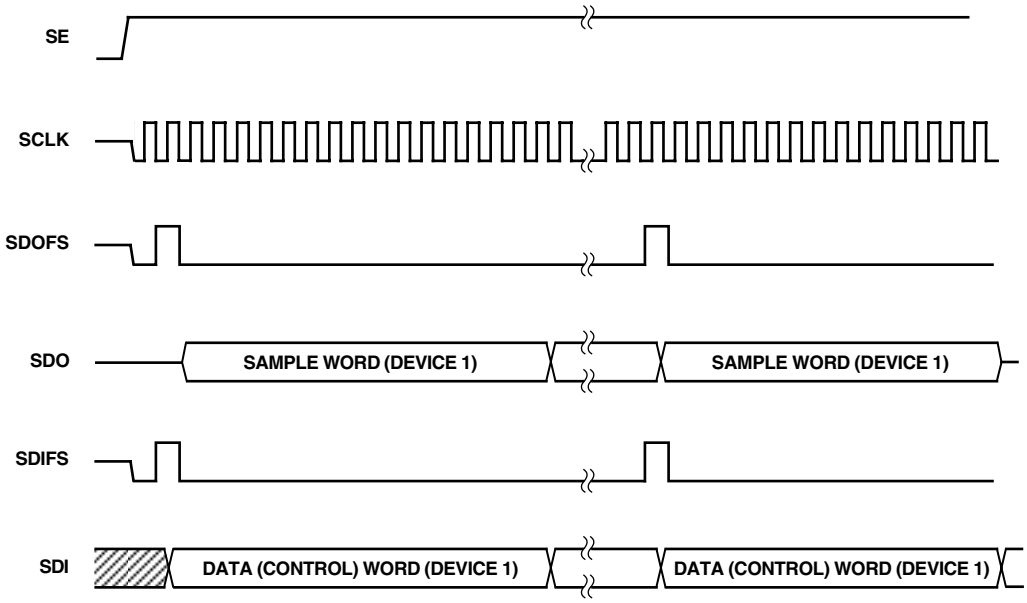

Figure 10. Interface Signal Timing for Single Device Operation

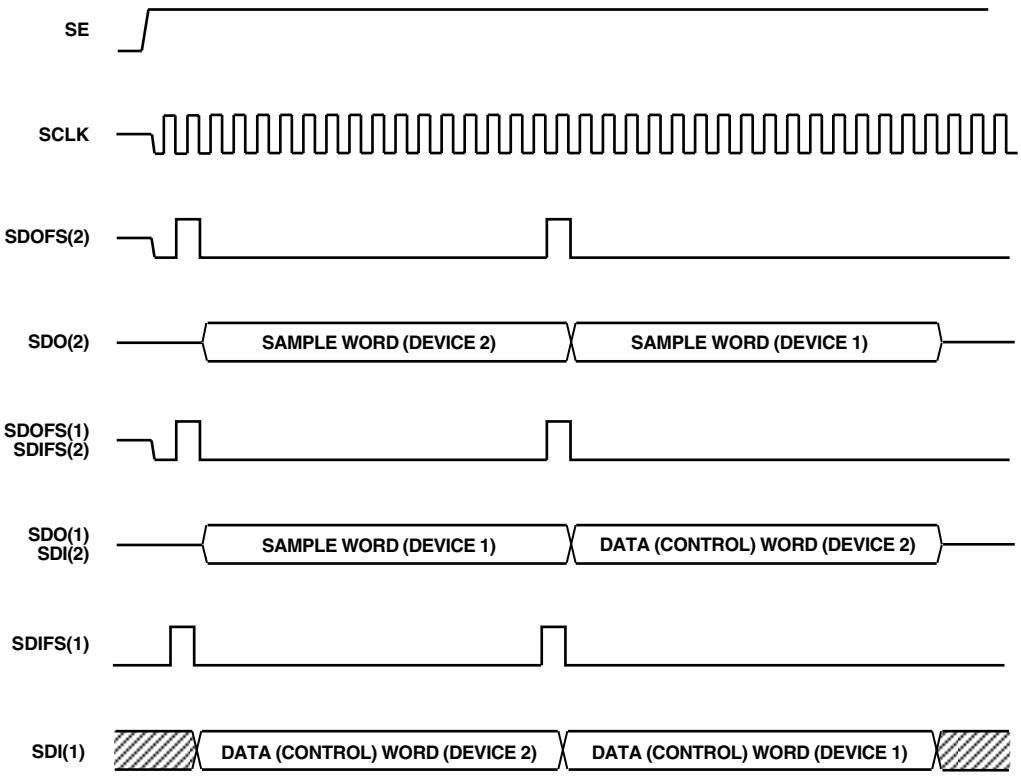

Figure 11. Interface Signal Timing for Cascade of Two Devices

INTERFACING

The AD73311 can be interfaced to most modern DSP engines using conventional serial port connections and an extra enable control line. Both serial input and output data use an accompanying frame synchronization signal which is active high one clock cycle before the start of the 16-bit word or during the last bit of the previous word if transmission is continuous. The serial clock (SCLK) is an output from the codec and is used to define the serial transfer rate to the DSP's Tx and Rx ports. Two primary configurations can be used: the first is shown in Figure 12 where the DSP's Tx data, Tx frame sync, Rx data and Rx frame sync are connected to the codec's SDI, SDIFS, SDO and SDOFS respectively. This configuration, referred to as indirectly coupled or nonframe sync loop-back, has the effect of decoupling the transmission of input data from the receipt of output data. The delay between receipt of codec output data and transmission of input data for the codec is determined by the DSP's software latency. When programming the DSP serial port for this configuration, it is necessary to set the Rx FS as an input and the Tx FS as an output generated by the DSP. This configuration is most useful when operating in mixed mode, as the DSP has the ability to decide how many words (either DAC or control) can be sent to the codec(s). This means that full control can be implemented over the device configuration as well as updating the DAC in a given sample interval. The second configuration (shown in Figure 13) has the DSP's Tx data and Rx data connected to the codec's SDI and SDO, respectively while the DSP's Tx and Rx frame syncs are connected to the codec's SDIFS and SDOFS. In this configuration, referred to as directly coupled or frame sync loop-back, the frame sync signals are connected together and the input data to the codec is forced to be synchronous with the output data from the codec. The DSP must be programmed so that both the Tx FS and Rx FS are inputs as the codec SDOFS will be input to both. This configuration guarantees that input and output events occur simultaneously and is the simplest configuration for operation in normal Data Mode. Note that when programming the DSP in this configuration it is advisable to preload the Tx register with the first control word to be sent before the codec is taken out of reset. This ensures that this word will be transmitted to coincide with the first output word from the device(s).

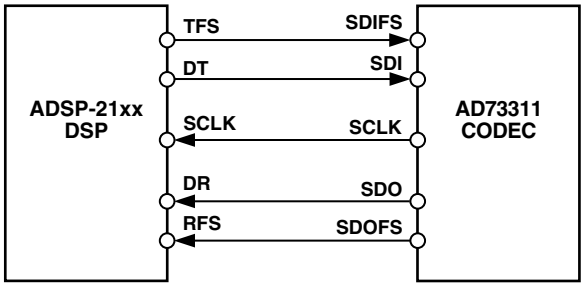

Figure 12. Indirectly Coupled or Nonframe Sync Loop-Back Configuration

Cascade Operation

The AD73311 has been designed to support up to eight codecs in a cascade connected to a single serial port, see Figure 31. The SPORT interface protocol has been designed so that device addressing is built into the packet of information sent to the device. This allows the cascade to be formed with no extra hardware overhead for control signals or addressing. A cascade can be formed in either of the two modes previously discussed.

There may be some restrictions in cascade operation due to the number of devices configured in the cascade and the serial clock rate chosen. Table XVI details the requirements for SCLK rate for cascade lengths from 1 to 8 devices. This assumes a directly coupled frame sync arrangement as shown in Figure 13.

Table XVI. Cascade Options

	Number of Devices in Cascade							
SCLK	**1**	**2**	**3**	**4**	**5**	**6**	**7**	**8**
DMCLK	✓	✓	✓	✓	✓	✓	✓	✓
DMCLK/2	✓	✓	✓	✓	✓	✓	✓	✓
DMCLK/4	✓	✓	✓	✓	X	X	X	X
DMCLK/8	✓	✓	X	X	X	X	X	X

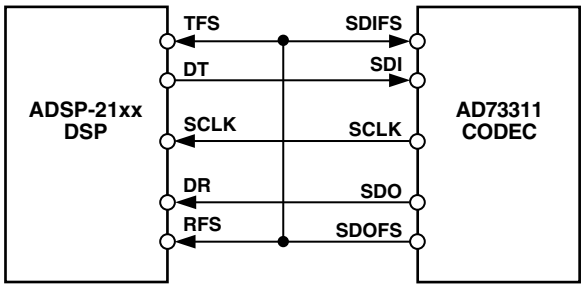

Figure 13. Directly Coupled or Frame Sync Loop-Back Configuration

When using the indirectly coupled frame sync configuration in cascaded operation it is necessary to be aware of the restrictions in sending data to all devices in the cascade. Effectively the time allowed is given by the sampling interval (256/DMCLK) which is 15.625 µs for a sample rate of 64 kHz. In this interval, the DSP must transfer N × 16 bits of information where N is the number of devices in the cascade. Each bit will take 1/SCLK and, allowing for any latency between the receipt of the Rx interrupt and the transmission of the Tx data, the relationship for successful operation is given by:

$$256/DMCLK > ((N/SCLK) + T_{INTERRUPT\ LATENCY})$$

The interrupt latency will include the time between the ADC sampling event and the Rx interrupt being generated in the DSP—this should be 16 SCLK cycles.

In Cascade Mode, each device must know the number of devices in the cascade because the Data and Mixed modes use a method of counting input frame sync pulses to decide when they should update the DAC register from the serial input register.

Control Register A contains a 3-bit field (DC0–2) that is programmed by the DSP during the programming phase. The default condition is that the field contains 000b, which is equivalent to a single device in cascade (see Table XVII). However, for cascade operation this field must contain a binary value that is one less than the number of devices in the cascade.

Table XVII. Device Count Settings

DC2	DC1	DC0	Cascade Length
0	0	0	1
0	0	1	2
0	1	0	3
0	1	1	4
1	0	0	5
1	0	1	6
1	1	0	7
1	1	1	8

PERFORMANCE

As the AD73311 is designed to provide high performance, low cost conversion, it is important to understand the means by which this high performance can be achieved in a typical application. This section will, by means of spectral graphs, outline the typical performance of the device and highlight some of the options available to users in achieving their desired sample rate, either directly in the device or by doing some post-processing in the DSP, while also showing the advantages and disadvantages of the different approaches.

Encoder Section

The encoder section samples at DMCLK/256, which gives a 64 kHz output rate for DMCLK equal to 16.384 MHz. The noise shaping of the sigma-delta modulator also depends on the frequency at which it is clocked, which means that the best dynamic performance in a particular bandwidth is achieved by oversampling at the highest possible rate. If we assume that the signals of interest are in the voice bandwidth of dc–4 kHz, then sampling at 64 kHz gives a spectral response which ensures good SNR performance in the voice bandwidth, as shown in Figure 14.

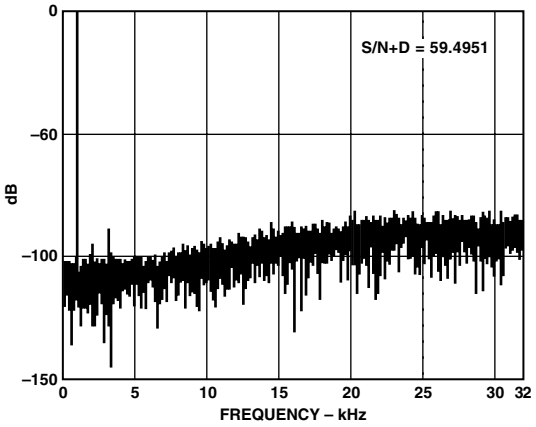

Figure 14. FFT (ADC 64 kHz Sampling)

If sampling at 8 kHz is required, the user must implement some post-processing in the DSP engine to band limit the signal and decimate the samples to achieve the ultimate sampling rate of 8 kHz. Figure 15 shows the final spectral response of the 64 kHz sampled data having been digitally filtered and decimated to an 8 kHz rate. The filter used was a 6th order elliptical filter.

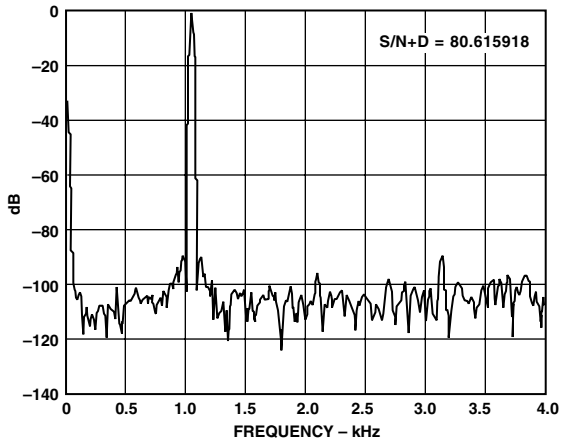

Figure 15. FFT (ADC 8 kHz Filtered and Decimated from 64 kHz)

The device features an on-chip master clock divider circuit that allows the sample rate to be reduced. The present choice of clock divider options permits the device to sample at 64 kHz, 32 kHz, 21.33 kHz, 16 kHz and 12.8 kHz from a 16.384 MHz master clock. Reducing the DMCLK rate lowers the sampling rate of the sigma-delta modulator, which causes the noise shaping to occur in a reduced bandwidth. The SNR performance up to $F_S/2$ will still be similar to that in the case of 64 kHz sampling, but will be disimproved in the voice bandwidth due to the reduced noise shaping. Figure 16 shows this effect for a sampling rate of 16 kHz.

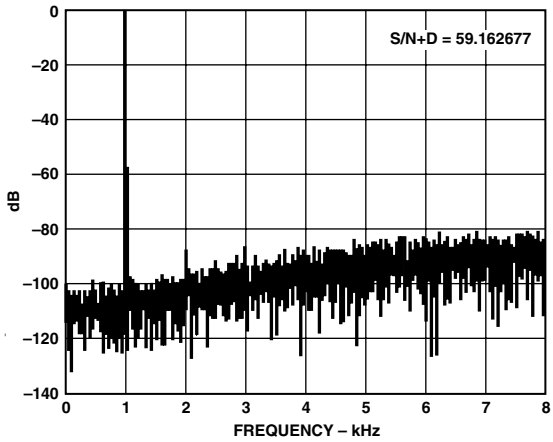

Figure 16. FFT (ADC 16 kHz Sampling)

In order to produce a direct sampling rate of 8 kHz, it is necessary to reduce the external master clock to 8.192 MHz and to set the master clock divider to a ratio of 4, which results in a sample rate of 8 kHz. In this case, the response of the $Sinc^3$ decimation filter may affect the response in the voice BW as its first null occurs at 8 kHz. In Figure 17, Trace A shows how the SNR remains approximately constant up to $F_S/2$ regardless of the sample rate F_S; Trace B shows that the SNR achievable in the voice BW is proportional to the sampling rate F_S. These two traces intersect at an F_S of 8 kHz which is the point where $F_S/2$ equals the voice BW.

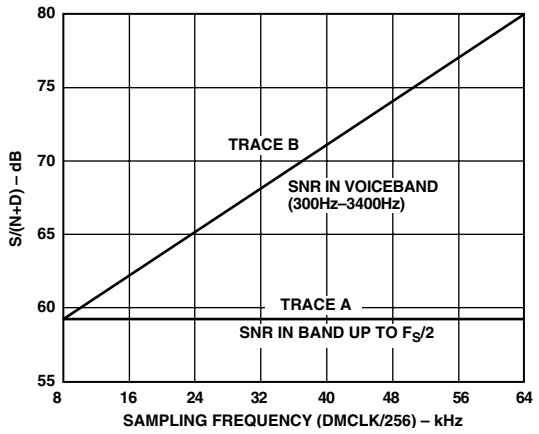

Figure 17. SNR vs. Sampling Frequency

If the input signal is externally band-limited, it is possible to achieve the 8 kHz sampling rate directly from the 64 kHz sample rate by decimating the sampled data in the DSP. This technique will alias the band between 8 kHz and 64 kHz into the 8 kHz band, therefore it is necessary to have good quality external band-limiting on the input signal. Figure 18 shows the spectral response of using this decimation technique for sample rate reduction.

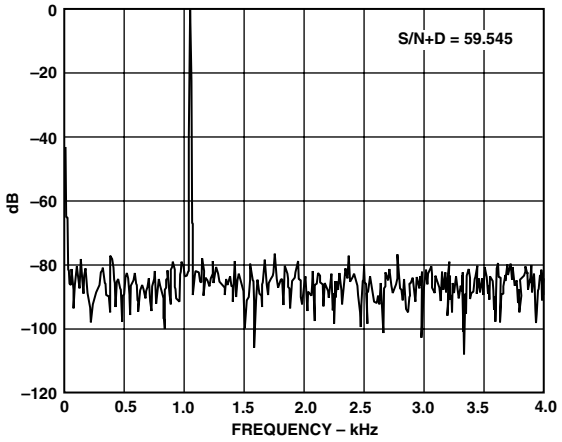

Figure 18. FFT (ADC 8 kHz Subsampled)

Encoder Group Delay

The AD73311 implementation offers a very low level of group delay, which is given by the following relationship:

$$Group\ Delay\ (Decimator) = Order \times ((M-1)/2) \times Tdec$$

where:

Order is the order of the decimator (= 3),

M is the decimation factor (= 32) and

Tdec is the decimation sample interval (= 1/2.048e6)
=> Group Delay (Decimator) = 3 × (32–1)/2 × (1/2.048e6) = 22.7 µs

If final filtering is implemented in the DSP, the final filter's group delay must be taken into account when calculating overall group delay.

Decoder Section

The decoder section updates (samples) at the same rate as the encoder section, MCLK/256, which gives a 64 kHz rate from an external MCLK of 16.384 MHz. Figure 19 shows the spectral response of the decoder section sampling at 64 kHz. Again, its sigma-delta modulator shapes the noise so it is reduced in the voice bandwidth dc–4 kHz. For improved voiceband SNR, the user can implement an initial anti-imaging filter, preceded by 8 kHz to 64 kHz interpolation, in the DSP.

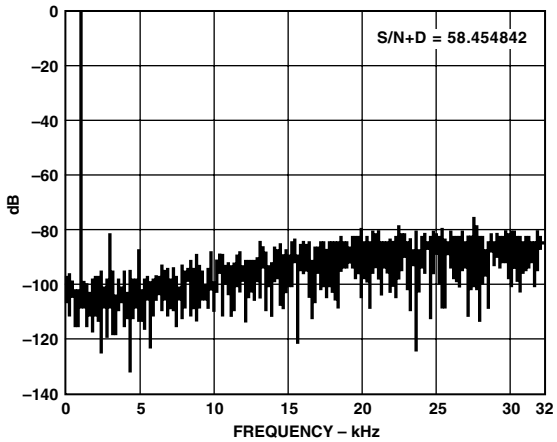

Figure 19. FFT (DAC 64 kHz Sampling)

As is the case with the encoder section, voiceband SNR is reduced if the DMCLK rate is reduced as shown by the example of 16 kHz sampling in Figure 20. This is due to the noise-shaping of the sigma-delta modulator being compressed into a smaller bandwidth, which increases the noise in the voice BW.

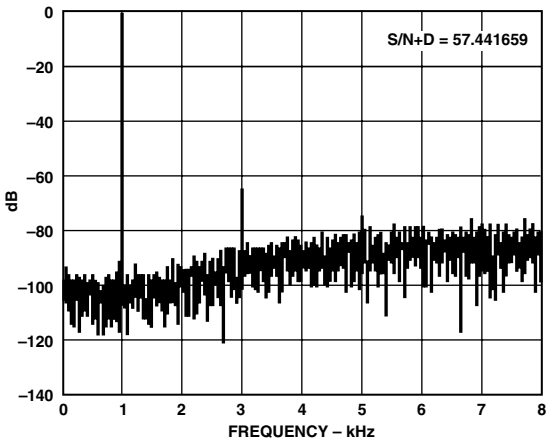

Figure 20. FFT (DAC 16 kHz Sampling)

It is also possible to subsample the DAC—update at a lower rate than the sampling rate—to reduce the overhead on the DSP. This, however, results in imaging of the subsampled bandwidth into the normal bandwidth, which implies that higher performance external anti-imaging filtering must be used to eliminate the images.

The interpolator input also provides a minimum group delay realization in situations where that is critical. Further reduction in group delay is possible by accessing the digital sigma-delta input at the expense of lower attenuation of images due to any repetition of input samples. Figure 21 shows the spectral response of the decoder being sampled at 64 kHz with its interpolator bypassed.

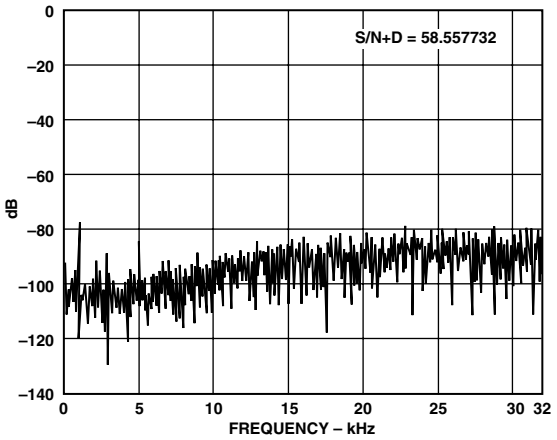

Figure 21. FFT (DAC 64 kHz Sampling—Interpolator Bypassed)

Decoder Group Delay

The interpolator roll-off is mainly due to its sync-cubed function characteristic, which has an inherent group delay given by the equation.

$$\text{Group Delay (Interpolator)} = Order \times (L - 1)/2) \times Tint$$

where:

Order is the interpolator order (= 3),

L is the interpolation factor (= 32) and

Tint is the interpolation sample interval (= 1/2.048e6)

=> Group Delay (Interpolator)
= 3*(32-1)/2*(1/2.048e6)
= 22.7 µs

The analog section has a group delay of approximately 25 µs.

DESIGN CONSIDERATIONS

Analog Input

The analog input signal to the codec can be dc coupled, provided that the dc bias level of the input signal is the same as the internal reference level (REFOUT). Figure 22 shows the recommended differential input circuit for the AD73311's analog input pins (VIN). The circuit of Figure 22 implements first-order low-pass filters with a 3 dB point at 34 kHz; these are the only filters that must be implemented external to the AD73311 to prevent aliasing of the sampled signal. Since the codec's ADC uses a highly oversampled approach that transfers the bulk of the antialiasing filtering into the digital domain, the off-chip antialiasing filter need only be of a low order. It is recommended that for optimum performance that the capacitors used for the antialiasing filter be of high quality dielectric (NPO).

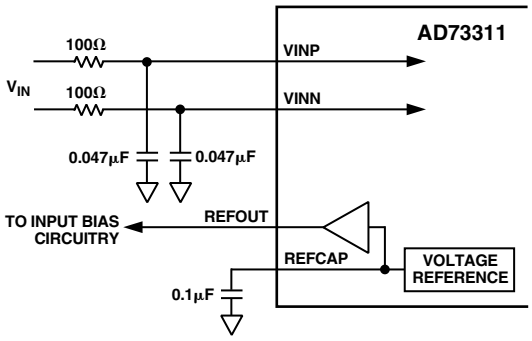

Figure 22. Example Circuit for Differential Input (DC Coupling)

The AD73311's on-chip 38 dB preamplifier can be enabled when there is not enough gain in the input circuit; the preamplifier is configured by bits IGS0–2 of CRD. The total gain must be configured to ensure that a full-scale input signal produces a signal level at the input to the sigma-delta modulator of the ADC that does not exceed the maximum input range.

The dc biasing of the analog input signal is accomplished with an on-chip voltage reference. If the input signal is not biased at the internal reference level (via REFOUT), then it must be ac-coupled with external coupling capacitors. C_{IN} should be 0.1 µF or larger. The dc biasing of the input can then be accomplished using resistors to REFOUT as in Figure 23.

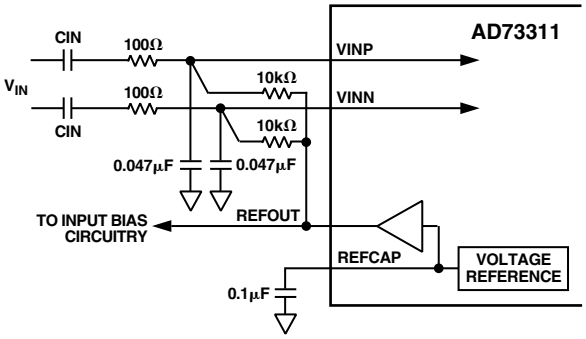

Figure 23. Example Circuit for Differential Input (AC Coupling)

Figures 24 and 25 detail dc- and ac-coupled input circuits for single-ended operation respectively.

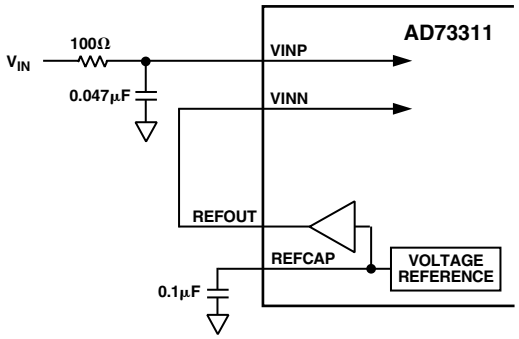

Figure 24. Example Circuit for Single-Ended Input (DC Coupling)

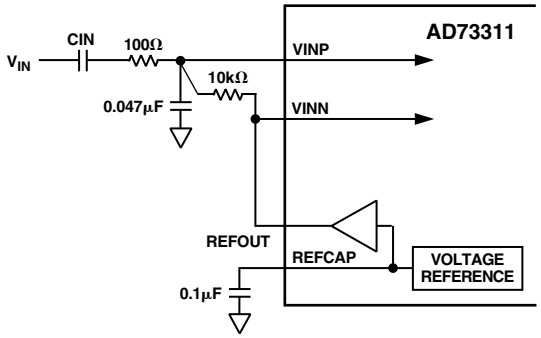

Figure 25. Example Circuit for Single-Ended Input (AC Coupling)

Analog Output

The AD73311's differential analog output (VOUT) is produced by an on-chip differential amplifier. The differential output can be ac-coupled or dc-coupled directly to a load or to an external amplifier. Figure 26 shows a simple circuit providing a differential output with ac coupling. The capacitors in this circuit (C_{OUT}) are optional; if used, their value can be chosen as follows:

$$C_{OUT} = \frac{1}{2\pi\, f_C\, R_L}$$

where f_C = desired cutoff frequency.

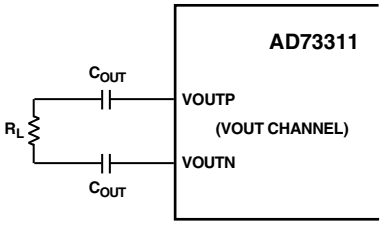

Figure 26. Example Circuit for Differential Output

Figure 27 shows an example circuit for providing a single-ended output with ac coupling. The capacitor of this circuit (C_{OUT}) is not optional if dc current drain is to be avoided.

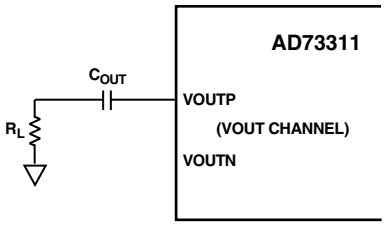

Figure 27. Example Circuit for Single-Ended Output

Digital Interfacing

The AD73311 is designed to easily interface to most common DSPs. The SCLK, SDO, SDOFS, SDI and SDIFS must be connected to the SCLK, DR, RFS, DT and TFS pins of the DSP respectively. The SE pin may be controlled from a parallel output pin or flag pin such as FL0–2 on the ADSP-21xx (or XF on the TMS320C5x) or, where SPORT powerdown is not required, it can be permanently strapped high using a suitable pull-up resistor. The $\overline{\text{RESET}}$ pin may be connected to the system hardware reset structure or it may also be controlled using a dedicated control line. In the event of tying it to the global system reset, it is necessary to operate the device in mixed mode, which allows a software reset, otherwise there is no convenient way of resetting the device. Figures 28 and 29 show typical connections to an ADSP-2181 and TMS320C5x respectively.

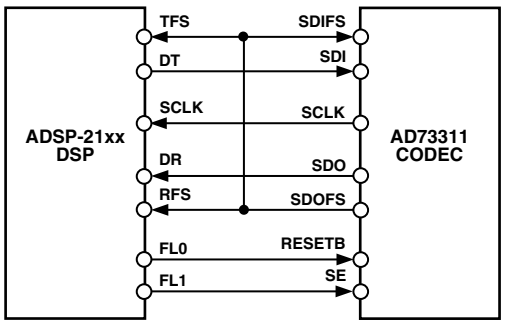

Figure 28. AD73311 Connected to ADSP-2181

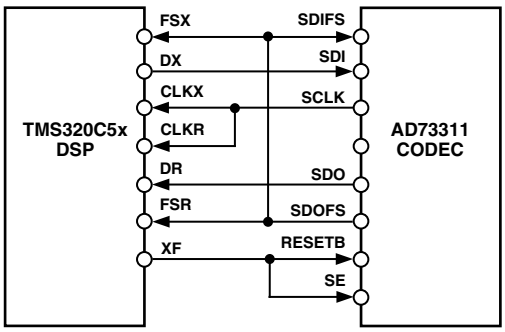

Figure 29. AD73311 Connected to TMS320C5x

Cascade Operation

Where it is required to configure a cascade of up to eight devices, it is necessary to ensure that the timing of the SE and $\overline{\text{RESET}}$ signals is synchronized at each device in the cascade. A simple D type flip flop is sufficient to sync each signal to the master clock MCLK, as in Figure 30.

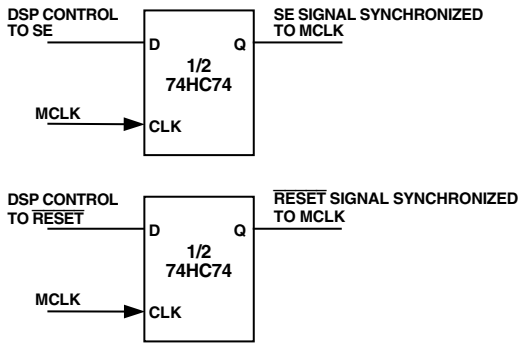

Figure 30. SE and $\overline{\text{RESET}}$ Sync Circuit for Cascaded Operation

Connection of a cascade of devices to a DSP, as shown in Figure 31, is no more complicated than connecting a single device. Instead of connecting the SDO and SDOFS to the DSP's Rx port, these are now daisy-chained to the SDI and SDIFS of the next device in the cascade. The SDO and SDOFS of the final device in the cascade are connected to the DSP's Rx port to complete the cascade. SE and $\overline{\text{RESETB}}$ on all devices are fed from the signals that were synchronized with the MCLK using the circuit as described above. The SCLK from only one device need be connected to the DSP's SCLK input(s) as all devices will be running at the same SCLK frequency and phase.

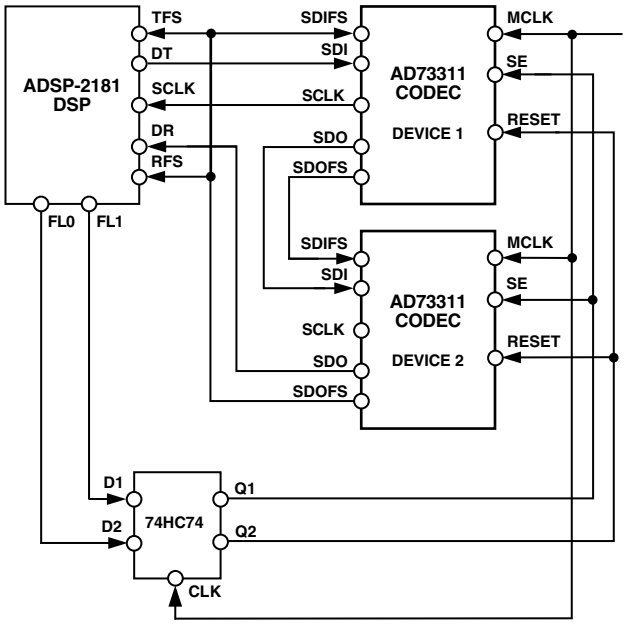

Figure 31. Connection of Two AD73311s Cascaded to ADSP-2181

Grounding and Layout

Since the analog inputs to the AD73311 are differential, most of the voltages in the analog modulator are common-mode voltages. The excellent common-mode rejection of the part will remove common-mode noise on these inputs. The analog and digital supplies of the AD73311 are independent and separately pinned out to minimize coupling between analog and digital sections of the device. The digital filters on the encoder section will provide rejection of broadband noise on the power supplies, except at integer multiples of the modulator sampling frequency. The digital filters also remove noise from the analog inputs provided the noise source does not saturate the analog modulator. However, because the resolution of the AD73311's ADC is high, and the noise levels from the AD73311 are so low, care must be taken with regard to grounding and layout.

The printed circuit board that houses the AD73311 should be designed so the analog and digital sections are separated and confined to certain sections of the board. The AD73311 pin configuration offers a major advantage in that its analog and digital interfaces are connected on opposite sides of the package. This facilitates the use of ground planes that can be easily separated, as shown in Figure 32. A minimum etch technique is generally best for ground planes as it gives the best shielding. Digital and analog ground planes should be joined in only one place. If this connection is close to the device, it is recommended to use a ferrite bead inductor as shown in Figure 32.

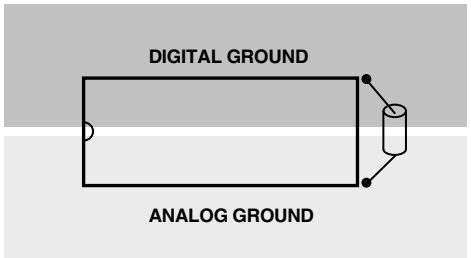

Figure 32. Ground Plane Layout

Avoid running digital lines under the device for they will couple noise onto the die. The analog ground plane should be allowed to run under the AD73311 to avoid noise coupling. The power supply lines to the AD73311 should use as large a trace as possible to provide low impedance paths and reduce the effects of glitches on the power supply lines. Fast switching signals such as clocks should be shielded with digital ground to avoid radiating noise to other sections of the board, and clock signals should never be run near the analog inputs. Traces on opposite sides of the board should run at right angles to each other. This will reduce the effects of feedthrough through the board. A microstrip technique is by far the best but is not always possible with a double-sided board. In this technique, the component side of the board is dedicated to ground planes while signals are placed on the other side.

Good decoupling is important when using high speed devices. All analog and digital supplies should be decoupled to AGND and DGND respectively, with 0.1 μF ceramic capacitors in parallel with 10 μF tantalum capacitors. To achieve the best from these decoupling capacitors, they should be placed as close as possible to the device, ideally right up against it. In systems where a common supply voltage is used to drive both the AVDD and DVDD of the AD73311, it is recommended that the system's AVDD supply be used. This supply should have the recommended analog supply decoupling between the AVDD pins of the AD73311 and AGND and the recommended digital supply decoupling capacitors between the DVDD pin and DGND.

DSP Programming Considerations

This section discusses some aspects of how the serial port of the DSP should be configured and the implications of whether Rx and Tx interrupts should be enabled.

DSP SPORT Configuration

Following are the key settings of the DSP SPORT required for the successful operation with the AD73311:

- Configure for external SCLK.
- Serial Word Length = 16 bits.
- Transmit and Receive Frame Syncs required with every word.
- Receive Frame Sync is an input to the DSP.
- Transmit Frame Sync is an:

  Input—in Frame Sync Loop-Back Mode

  Output—in Nonframe Sync Loop-Back Mode.
- Frame Syncs occur one SCLK cycle before the MSB of the serial word.
- Frame Syncs are active high.

DSP SPORT Interrupts

If SPORT interrupts are enabled, it is important to note that the active signals on the frame sync pins do not necessarily correspond with the positions in time of where SPORT interrupts are generated.

On ADSP-21xx processors, it is necessary to enable SPORT interrupts and use Interrupt Service Routines (ISRs) to handle Tx/Rx activity, while on the TMS320CSx processors it is possible to poll the status of the Rx and Tx registers, which means that Rx/Tx activity can be monitored using a single ISR that would ideally be the Tx ISR as the Tx interrupt will typically occur before the Rx ISR.

APPENDIX A

Programming a Single AD73311 for Data Mode Operation

This section describes a typical sequence in programming a single codec to operate in normal DATA mode. It details the control (program) words that are sent to the device to configure its internal registers and shows the typical output data received during both program and data modes. The device is connected in Frame Sync Loop-Back Mode (see Figure 13), which forces an input word from the DSP's Tx Reg each time the codec outputs a word via the SDO/SDOFS lines. In Step 1, the part has just been reset and on the first output event the codec presents an invalid output word[1]. The DSP's Tx Reg contains a control word that programs CRB with the data word 0x03. In Step 2, the control word from the DSP's Tx Reg has been sent to the codec's SPORT and the output word has been received by the DSP's Rx Reg. In Steps 3 and 4, register CRC is programmed with 0x01, which powers up the analog section. In Steps 5 and 6, the codec is put into programming mode by setting the $\overline{\text{PGM}}$/DATA bit of CRA. In Step 7, the output word from the device is now a valid ADC word as the device has been programmed into data mode. Note also that the codec now expects DAC data to be sent to it and will interpret any data from the DSP to be 16-bit DAC data.

NOTE

[1]Data output by the codec in program mode is invalid and should not be interpreted as ADC data. The only exception to this is output caused by register reads or CEE being enabled on control word writes.

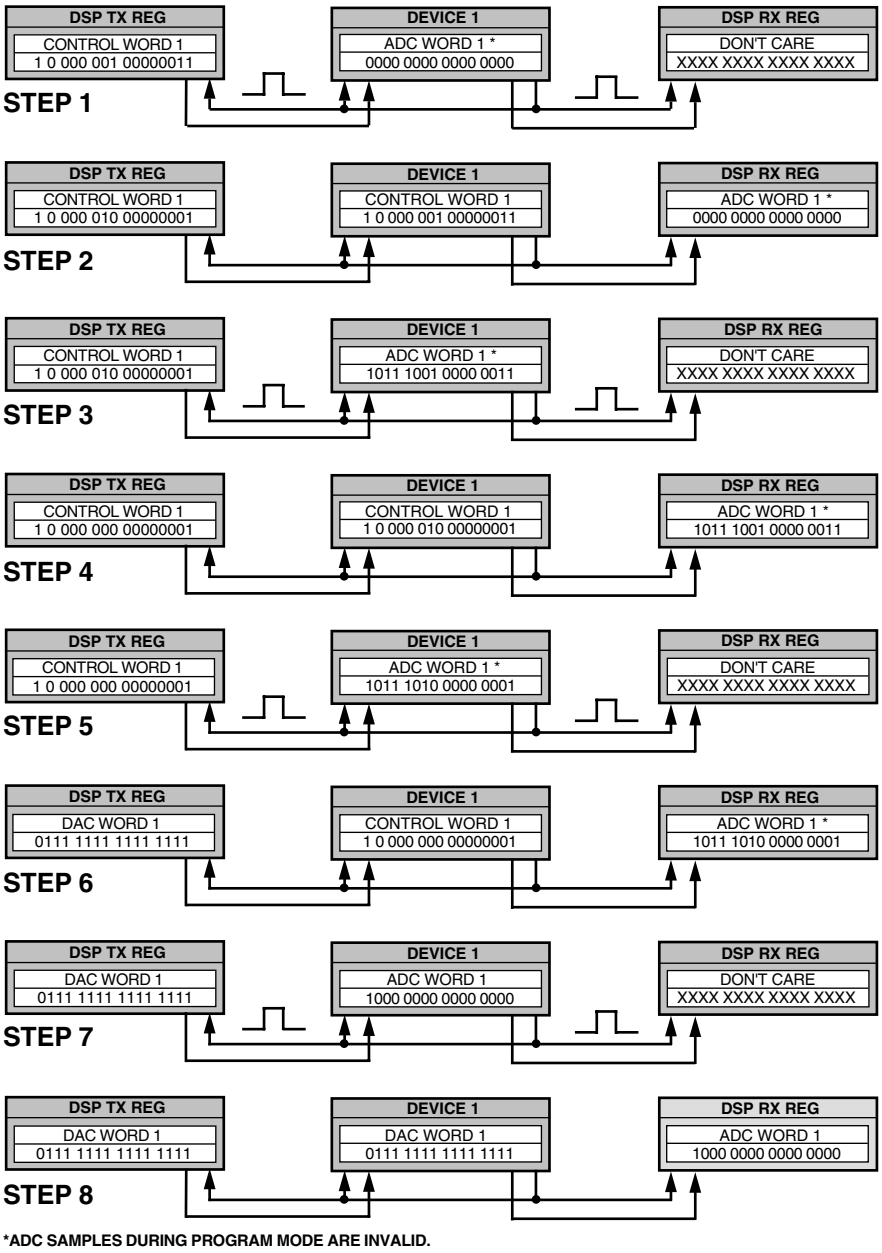

Figure 33. Programming a Single AD73311 for Normal

APPENDIX B

Programming a Single AD73311 for Mixed Mode Operation

This section describes a typical sequence in programming a single codec to operate in mixed mode. The device is connected in Nonframe Sync Loop-Back Mode (see Figure 14), which allows the DSP's Tx Reg to determine how many words are sent to the device. In Step 1, the part has just been reset and on the first output event the codec presents an invalid output word[1]. The DSP's Tx Reg contains a control word that programs CRA with the data word 0x03, which will put the device in mixed mode. In Step 2, the control word from the DSP's Tx Reg has been sent to the codec's SPORT and the output word has been received by the DSP's Rx Reg. The Tx Register raises the SDIFS to send a control word that will program CRB of the codec. In Step 3 the SCLK and sample rate are set by programming CRB. In Step 4, the analog sections of the device are powered up by programming CRC, while in Step 5, the encoder gain is set to 0 dB via CRD. In Step 6, the DAC register is updated by the contents of the serial register. Alternately, a register read cycle could be introduced instead of the DAC load in Step 6[2]. Steps 7 and 8 show another ADC read, DAC write cycle.

NOTES

[1]Data output by the codec in program mode is invalid and should not be interpreted as ADC data. The only exception to this is output caused by register reads or CEE being enabled on control word writes.

[2]In mixed mode, it may be necessary to terminate a control word write to a device with a control word read to that device in order to ensure that the next ADC sample is correct. Alternatively the ADC word can either be discarded or, if this is not possible, it can be rebuilt by incrementing the "address field" within the 16-bit word.

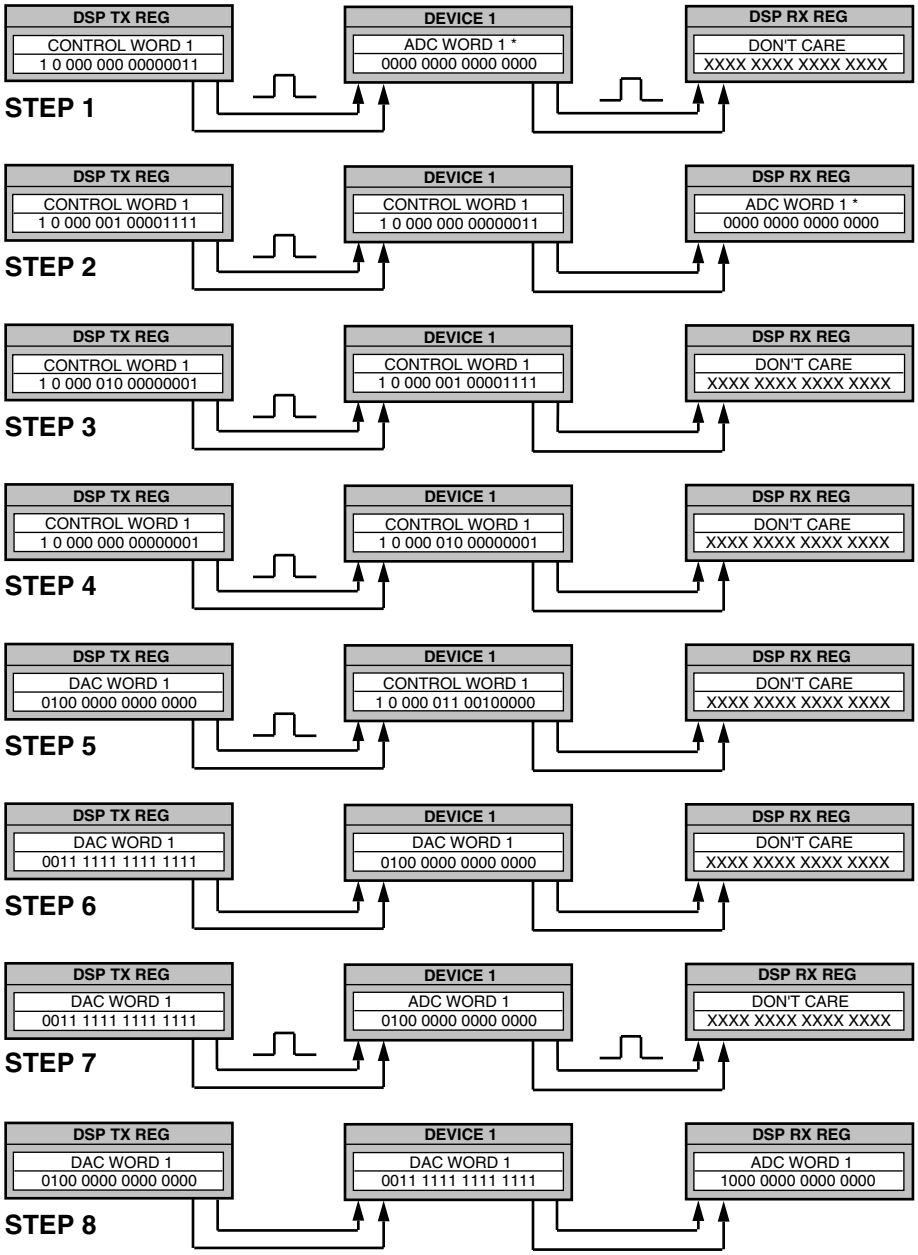

Figure 34. Programming a Single AD73311 for Mixed Mode

APPENDIX C
Configuring a Cascade of Two AD73311s to Operate in Data Mode

This section describes a typical sequence of control words that would be sent to a cascade of two AD73311s to set them up for operation. It is not intended to be a definitive initialization sequence, but will show users the typical input/output events that occur in the programming and operation phases[1]. This description panel refers to Figure 35.

In Step 1, we have the first output sample event following device reset. The SDOFS signal is raised on both devices simultaneously, which prepares the DSP Rx register to accept the ADC word from Device 2, while SDOFS from Device 1 becomes an SDIFS to Device 2. As the SDOFS of Device 2 is coupled to the DSP's TFS and RFS, and to the SDIFS of Device 1, this event also forces a new control word to be output from the DSP Tx register to Device 1.

In Step 2, we observe the status of the devices following the transmission of the first control word. The DSP has received the ADC word from Device 2, while Device 2 has received the ADC word from Device 1 and Device 1 has received the Control word destined for Device 2. At this stage, the SDOFS of both devices are again raised because Device 2 has received Device 1's ADC word, and as it is not a valid control word addressed to Device 2, it is passed on to the DSP. Likewise, Device 1 has received a control word destined for Device 2—address field is not zero—and it decrements the address field of the control word and passes it on.

Step 3 shows completion of the first series of control word writes. The DSP has now received both invalid ADC words and each device has received a control word that addresses control register B and sets the internal MCLK divider ratio to 1, SCLK rate to DMCLK/8. Note that both devices are updated simultaneously as both receive the addressed control word at the same time. This is an important factor in cascaded operation as any latency between updating the SCLK or DMCLK of devices can result in corrupted operation. This will not happen in the case of a FSLB configuration as shown here, but must be taken into account in a non-FSLB configuration. One other important observation of this sequence is that the data words are received and transmitted in reverse order, i.e., the ADC words are received by the DSP, Device 2 first, then Device 1, and similarly the transmit words from the DSP are sent Device 2 first, then Device 1. This ensures that all devices are updated at the same time.

In Step 4, the next ADC sample event that happens raises the SDOFS lines of each of the devices. The DSP Tx register contains the first of the two control words to be written to the cascade—the word for Device 2.

In Step 5, following transmission of the first of the two control words, the DSP Rx register contains Device 2's ADC word, Device 2's serial register contains the Device 1 ADC word, Device 1's serial register contains the control word addressed to Device 2 and the DSP Tx register contains the next control word—that addressed to Device 1. Again, both devices raise their SDOFS lines as both have received control words not addressed to them.

Step 6 shows the completion of the second set of control word writes. In this case, both devices have received a control word addressed to control register A, which sets the device count field equal to two devices in cascade and sets the $\overline{\text{PGM}}$/DATA bit to one to put the device in data mode.

In Step 7, the programming phase is complete and we now begin actual device data read and write. The words loaded into the serial registers of the two devices at the ADC sampling event now contain valid ADC data and the words written to the devices from the DSP's Tx register will now be interpreted as DAC words. Note, therefore, that the DSP Tx register contains the DAC word for Device 2.

In Step 8, the first DAC word has been transmitted into the cascade and the ADC word from Device 2 has been read from the cascade. The DSP Tx register now contains the DAC word for Device 1. As the words being sent to the cascade are now being interpreted as 16-bit DAC words, the addressing scheme now changes from one where the address was embedded in the transmitted word to one where the serial port now counts the SDIFS pulses. When the number of SDIFS pulses received equals the value in the device count field of control register A—the length of the cascade—each device updates its DAC register with the present word in its serial register. In Step 8 each device has received only one SDIFS pulse; Device 2 received one SDIFS from the SDOFS of Device 1 when it sent its ADC word and Device 1 received one SDIFS pulse when it received the DAC word for Device 2 from the DSP's Tx register. Therefore, each device raises its SDOFS line to pass on the current word in its serial register, and each device now receives another SDIFS pulse.

Step 9 shows the completion of an ADC read and DAC write cycle. Following Step 8, each device has received two SDIFS pulses that equal the setting of the device count field in Control Register A. The DAC register in each device is now updated with the contents of the word that accompanied the SDIFS pulse which satisfied the device count requirement. The internal frame sync counter is now reset to zero and will begin counting for the next DAC update cycle.

NOTE
[1]This sequence assumes that the DSP SPORT's Rx and Tx interrupts are enabled. It is important to ensure that there is no latency (separation) between control words in a cascade configuration. This is especially the case when programming Control Register B as it contains settings for SCLK and DMCLK rates.

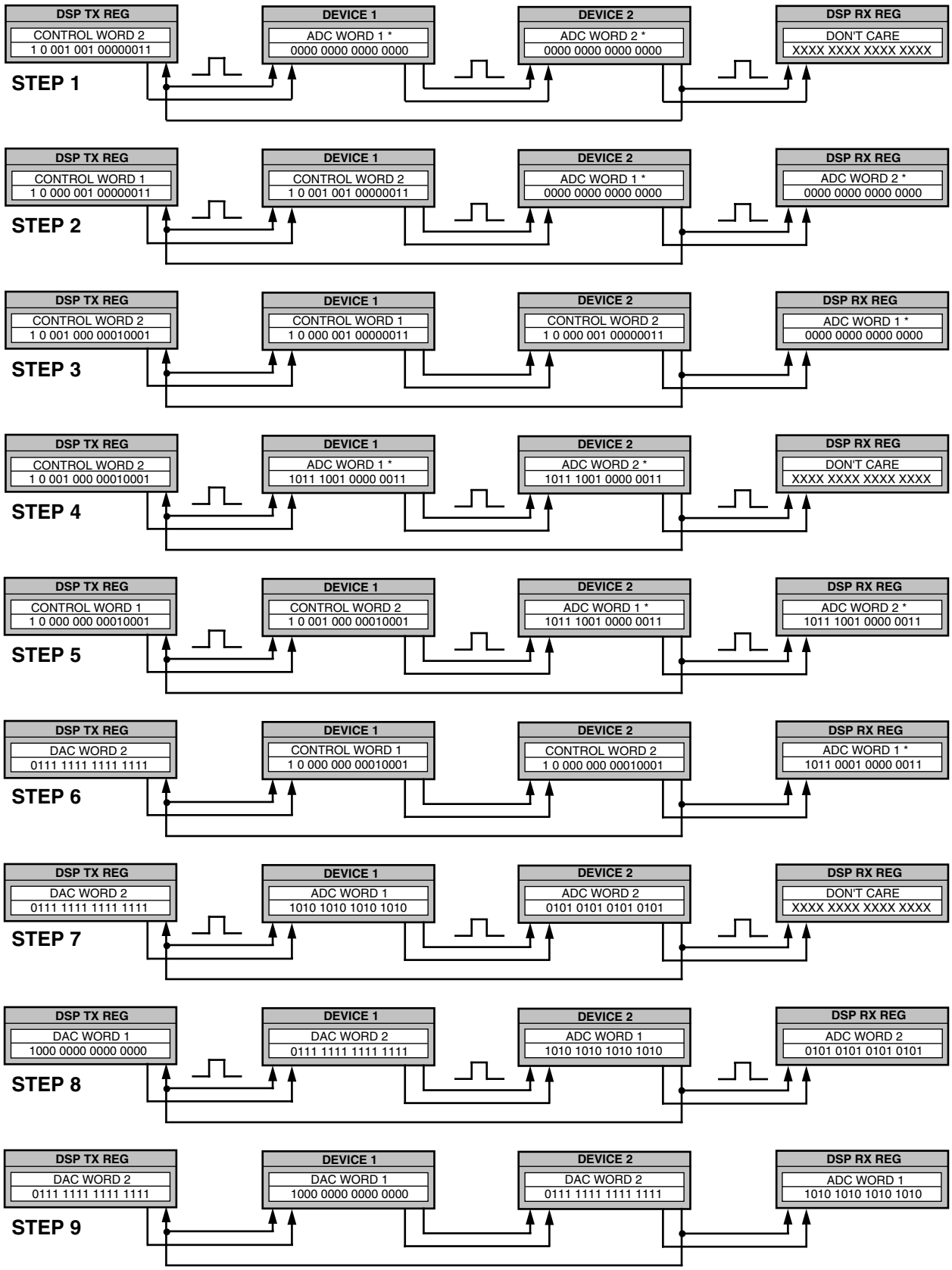

***ADC SAMPLES DURING PROGRAM MODE ARE INVALID.**

Figure 35. Programming Two AD73311s in Cascade for Normal Data Mode

APPENDIX D

Configuring a Cascade of Two AD73311s to Operate in Mixed Mode

This section describes a typical sequence of control words that would be sent to a cascade of two AD73311s to configure them for operation in mixed mode. It is not intended to be a definitive initialization sequence, but will show users the typical input/output events that occur in the programming and operation phases[1]. This description panel refers to Figure 36.

In Step 1, we have the first output sample event following device reset. The SDOFS signal is raised on both devices simultaneously, which prepares the DSP Rx register to accept the ADC word from Device 2 while SDOFS from Device 1 becomes an SDIFS to Device 2. The cascade is configured as nonFSLB, which means that the DSP has control over what is transmitted to the cascade[2].

In Step 2, we observe the status of the devices following the transmission of the first control word. The DSP has received the ADC word from Device 2, while Device 2 has received the ADC word from Device 1 and Device 1 has received the Control word destined for Device 2. At this stage, the SDOFS of both devices are again raised because Device 2 has received Device 1's ADC word and, as it is not addressed to Device 2, it is passed on to the DSP. Likewise, Device 1 has received a control word destined for Device 2—address field is not zero—and it decrements the address field of the control word and passes it on.

Step 3 shows completion of the first series of control word writes. The DSP has now received both ADC words and each device has received a control word that addresses Control Register A and sets the device count field equal to two devices and programs the devices into Mixed Mode—MM and $\overline{\text{PGM}}$/DATA set to one.

In Step 4, the next ADC sample event that happens raises the SDOFS lines of each of the devices. The devices are in mixed mode, which means that the serial port interrogates the MSB of the 16-bit word sent to determine whether it contains DAC data or control information. Following the programming of the device, the ADC word in each device may need to be reconstructed into mixed mode in Steps 1 to 3. This phenomenon also occurs during mixed mode operation when a control word is written to a device. The DSP Tx register contains the first of the two control words to be written to the cascade—the word for Device 2.

In Step 5, following transmission of the first of the two control words, the DSP Rx register contains Device 2's ADC word, Device 2's serial register contains the Device 1 ADC word, Device 1's serial register contains the control word addressed to Device 2, and the DSP Tx register contains the next control word—that addressed to Device 1. Again, both devices raise their SDOFS lines as both have received control words not addressed to them.

Step 6 shows the completion of the second set of control word writes. In this case both devices have received a control word addressed to Control Register C which powers up the analog sections of the devices. A control word is sent from the DSP's Tx register to read control register C of Device 2. This is done to avoid corruption of the next ADC word[3].

In Step 7, the control word written to Device 2 is in Device 1, and the DSP Tx register contains a control word to read Register C of Device 1.

In Step 8, the control words implementing a read have been received by both Devices 1 and 2. When the read bit in the control word is recognized, it generates SDOFS pulses in both devices to output the register data.

In Step 9, the read word from Device 2 has been transferred to the DSP's Rx register with its address field decremented. The read word from Device 1 has been transferred to Device 2's serial register with its address field decremented. As this control word in Device 2 does not have its address field at zero, it is not addressing Device 2; it is shifted out of Device 2 following the pulsing of the SDOFS line.

In Step 10, the readback is complete with the Device 1 read word being transferred to the DSP's Rx register. Note that its address field has been further decremented.

Step 11 shows the next sample event. Note that the ADC values are not corrupted due to the effects of the reads implemented in steps 6–9.

The above example does not implement a DAC update but it is possible to update the DACs and modify the control registers within an ADC sampling interval providing the SCLK rate and cascade length allows. DAC update uses the same frame sync counting mechanism as detailed in the section on programming a cascade for data mode operation[4].

NOTES

[1]This sequence assumes that the DSP SPORT's Rx and Tx interrupts are enabled. It is important to ensure there is no latency (separation) between control words in a cascade configuration. This is especially the case when programming Control Register B, as it contains settings for SCLK and DMCLK rates.

[2]In mixed mode it is possible to transmit both DAC and control words to the devices in a cascade. If FSLB is used, the number of words sent to the cascade equals the number of devices in the cascade, which means that DAC updates may need to be substituted with a register write. In nonFSLB, the DSP can send extra control words if necessary and if there is sufficient time before the next sample event.

[3]In mixed mode, it may be necessary to terminate a control word write to a device with a control word read to that device in order to ensure that the next ADC sample is correct. Alternatively the ADC word can either be discarded or, if this is not possible, be rebuilt by incrementing the "address field" within the 16-bit word.

[4]In mixed mode, DAC update is done using the same SDIFS counting scheme as in normal data mode with the exception that only DAC words (MSB set to zero) are recognized as being able to increment the frame sync counters.

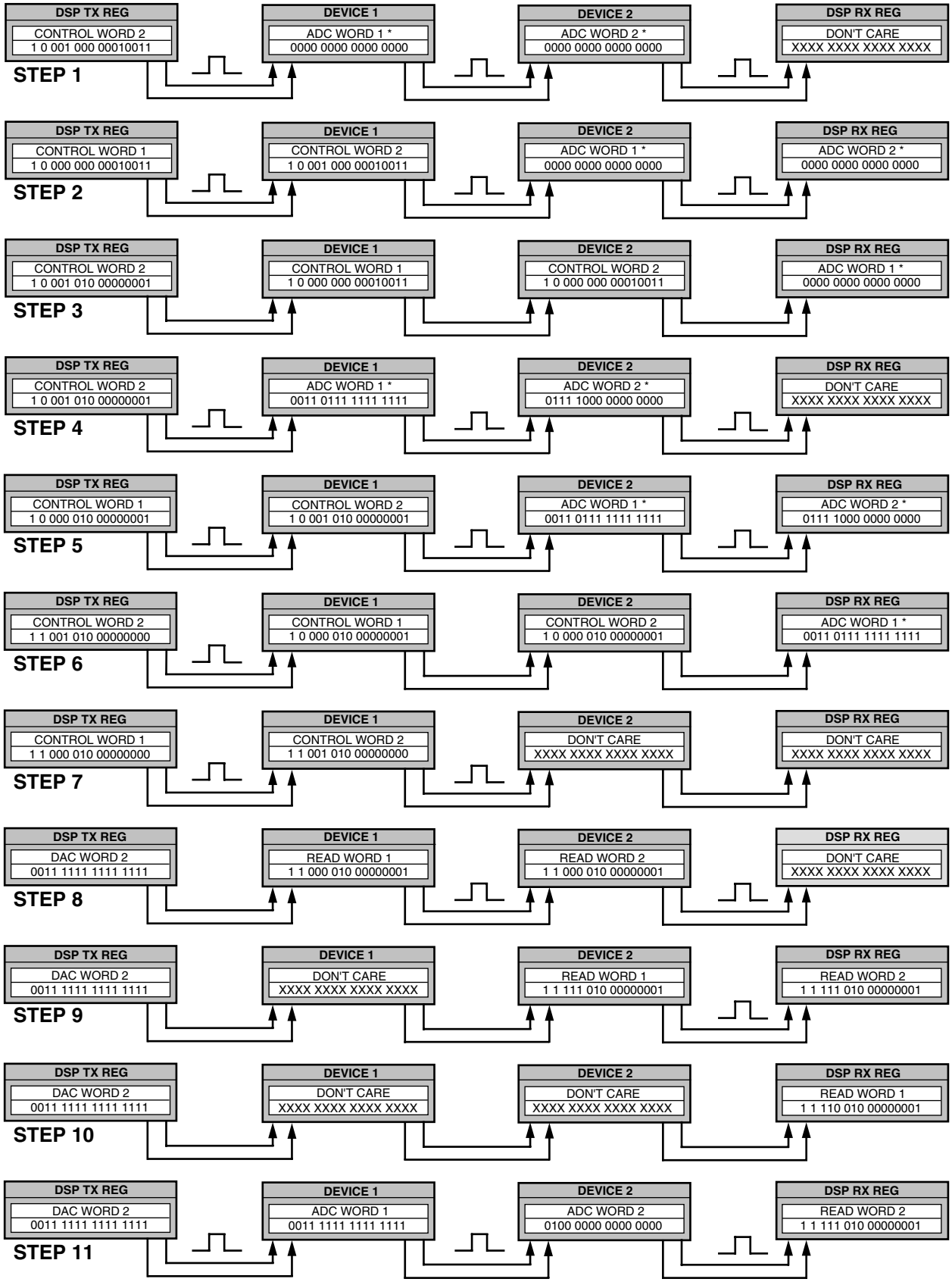

*ADC SAMPLES DURING PROGRAM MODE ARE INVALID.

Figure 36. Programming Two AD73311s in Cascade for Mixed Mode

APPENDIX E

DAC Timing Control Example

The AD73311's DAC is loaded from the DAC register contents just before the ADC register contents are loaded to the serial register (SDOFS going high). This default DAC load position can be advanced in time to occur earlier with respect to the SDOFS going high. Figure 37 shows an example of the ADC unload and DAC load sequence. At time t_1 the SDOFS is raised to indicate that a new ADC word is ready. Following the SDOFS pulse, 16 bits of ADC data are clocked out on SDO in the subsequent 16 SCLK cycles finishing at time t_2 where the DSP's SPORT will have received the 16-bit word. The DSP may process this information and generate a DAC word to be sent to the AD73311. Time t_3 marks the beginning of the sequence of sending the DAC word to the AD73311. This sequence ends at time t_4 where the DAC register will be updated from the 16 bits in the AD73311's serial register. However, the DAC will not be updated from the DAC register until time t_5 which may not be acceptable in certain applications. In order to reduce this delay and load the DAC at time t_6, the DAC advance register can be programmed with a suitable setting corresponding to the required time advance (refer to Table VIII for details of DAC Timing Control settings).

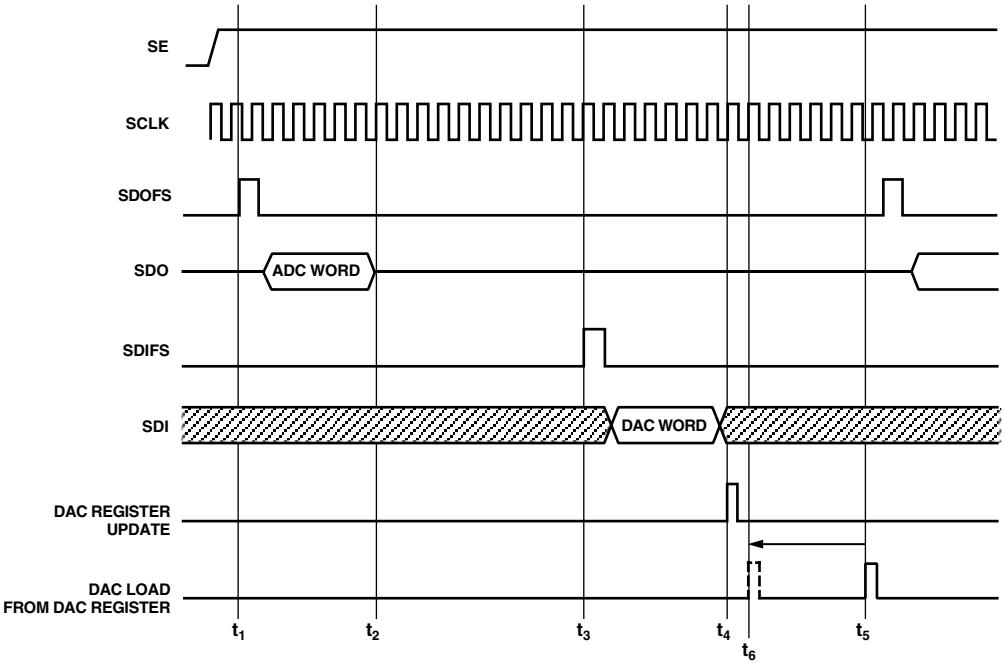

Figure 37. DAC Timing Control

Topic	Page
FEATURES	1
FUNCTIONAL BLOCK DIAGRAM	1
GENERAL DESCRIPTION	1
SPECIFICATIONS (3 V)	2, 3
SPECIFICATIONS (5 V)	4, 5
TIMING CHARACTERISTICS (3 V)	6
TIMING CHARACTERISTICS (5 V)	7
Timing Diagrams	7, 8
Performance Graphs	8, 22–24
ABSOLUTE MAXIMUM RATINGS	9
ORDERING GUIDE	9
PIN CONFIGURATION	9
PIN FUNCTION DESCRIPTIONS	10
TERMINOLOGY	11
ABBREVIATIONS	11
FUNCTIONAL DESCRIPTION	12
Encoder Channel	12
Programmable Gain Amplifier	12
ADC	12
Analog Sigma-Delta Modulator	12
Decimation Filter	13
ADC Coding	13
Decoder Channel	13
DAC Coding	13
Interpolation Filter	13
Analog Smoothing Filter & PGA	14
Differential Output Amplifiers	14
Voltage Reference	14
Serial Port (SPORT)	14
SPORT Overview	14
SPORT Register Maps	15
Master Clock Divider	15
Serial Clock Rate Divider	15
DAC Advance Register	15
OPERATION	16
Resetting the AD73311	16
Power Management	16
Operating Modes	16
Control Register Tables	17, 18
Program (Control) Mode	19
Data Mode	19
Mixed Program/Data Mode	19
Analog Loop-Back	19
Digital Loop-Back	19
Interface Signal Timing	20
INTERFACING	21
Cascade Operation	21
PERFORMANCE	22
Encoder Section	22
Encoder Group Delay	23
Decoder Section	23
Decoder Group Delay	24
DESIGN CONSIDERATIONS	24
Analog Input	24
Analog Output	25
Digital Interfacing	25
Cascade Operation	26
Grounding and Layout	26
DSP Programming Considerations	27
DSP SPORT Configuration	27
DSP SPORT Interrupts	27
APPENDIX A (Single Device Data Mode Operation)	28
APPENDIX B (Single Device Mixed Mode Operation)	29
APPENDIX C (Dual Device Data Mode Operation)	30, 31
APPENDIX D (Dual Device Mixed Mode Operation)	32, 33
APPENDIX E (DAC Timing Control Example)	34
OUTLINE DIMENSIONS	36

OUTLINE DIMENSIONS

Dimensions shown in inches and (mm).

20-Lead Small Outline IC (R-20)

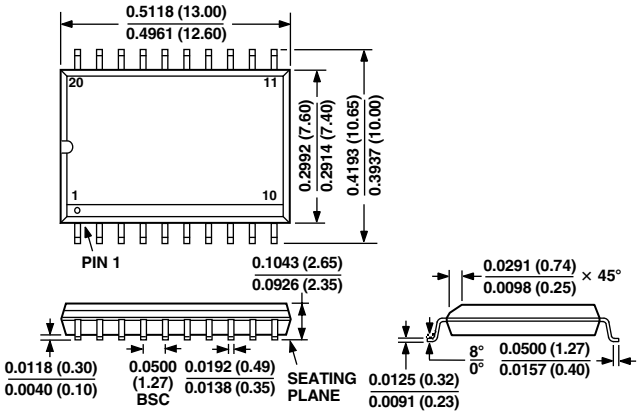

20-Lead Shrink Small Outline IC (RS-20)

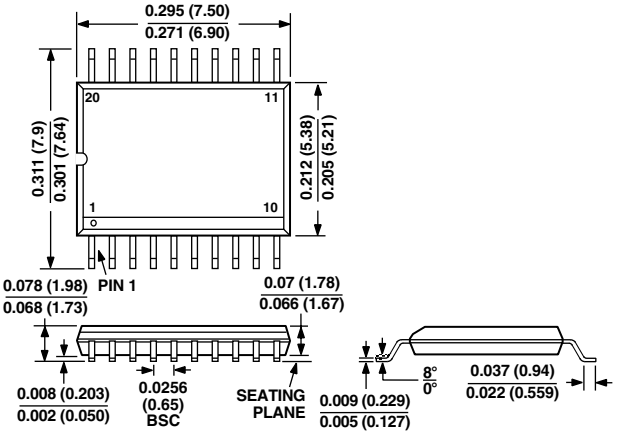

C00688a–0–6/00 (rev. B)

PRINTED IN U.S.A.

О компании

ООО "ТрейдЭлектроникс" - это оперативные поставки широкого спектра электронных компонентов отечественного и импортного производства напрямую от производителей и с крупнейших мировых складов. Реализуемая нашей компанией продукция насчитывает более полумиллиона наименований.

Благодаря этому наша компания предлагает к поставке практически не ограниченный ассортимент компонентов как оптовыми, мелкооптовыми партиями, так и в розницу.

Наличие собственной эффективной системы логистики обеспечивает надежную поставку продукции по конкурентным ценам в точно указанные сроки.

Срок поставки со стоков в **Европе и Америке – от 3 до 14 дней.**

Срок поставки из **Азии – от 10 дней.**

Благодаря развитой сети поставщиков, помогаем в поиске и приобретении экзотичных или снятых с производства компонентов.

Предоставляем спец цены на элементы для создания инженерных сэмплов.

Упорный труд, качественный результат дают нам право быть уверенными в себе и надежными для наших клиентов.

Наша компания это:

- Гарантия качества поставляемой продукции
- Широкий ассортимент
- Минимальные сроки поставок
- Техническая поддержка
- Подбор комплектации
- Индивидуальный подход
- Гибкое ценообразование

Наша организация особенно сильна в поставках модулей, микросхем, пассивных компонентов, ксайленсах (XC), EPF, EPM и силовой электроники.

Большой выбор предлагаемой продукции, различные виды оплаты и доставки, позволят Вам сэкономить время и получить максимум выгоды от сотрудничества с нами!

Trade Electronics.ru

гарантия бесперебойности производства и качества выпускаемой продукции

Перечень производителей, продукцию которых мы поставляем на российский рынок

AMD
ANALOG DEVICES
BOURNS
Coilcraft
élantec Semiconductor, Inc.
HARRIS
Infineon
JRC
MICREL
MOTOROLA
nichicon
PHILIPS
ROHM
SGS-THOMSON
Sipex
TAIYO YUDEN
TOKO
ZILOG
Winbond
Allegro
ATMEL
BURR - BROWN
EXAR
HITACHI
intel
Lattice
muRata
OKI
QUALCOMM
SAMSUNG
SHARP
SONY
TDK
TOSHIBA
KYOCERA
ALTERA
AVX
CITILYST
CYPRESS
FAIRCHILD SEMICONDUCTOR
HOLTEK
International IOR Rectifier
LINEAR TECHNOLOGY
MITSUBISHI
National Semiconductor
ON Semiconductor
REALTEK
SANYO
SHINDENGEN
SGS
TECCOR
TUNDRA
XILINX
Amphenol
Bay Linear
CIRRUS LOGIC
DALLAS
FUJITSU
IDT
intersil
MAXIM
molex
NEC
Panasonic
RENESAS
SII
SIEMENS
ST
Texas Instruments
VISHAY
ZETEX SEMICONDUCTORS

Trade Electronics.ru

гарантия бесперебойности производства и качества выпускаемой продукции

С удовольствием будем прорабатывать для Вас поставки всех необходимых компонентов по текущим запросам для скорейшего выявления групп элементов, по которым сотрудничество именно с нашей компанией будет для Вас максимально выгодным!

С уважением,

Менеджер отдела продаж ООО

«Трейд Электроникс»

Шишлаков Евгений

8 (495)668-30-28 доб 169

manager28@tradeelectronics.ru

http://www.tradeelectronics.ru/