19-5266; Rev 5/10

DS1642
Nonvolatile Timekeeping RAM

www.maxim-ic.com

FEATURES

- Integrated NV SRAM, Real-Time Clock, Crystal, Power-Fail Control Circuit, and Lithium Energy Source
- Standard JEDEC Bytewide 2k x 8 Static RAM Pinout
- Clock Registers are Accessed Identically to the Static RAM. These Registers are Resident in the Eight Top RAM Locations
- Totally Nonvolatile with Over 10 Years of Operation in the Absence of Power
- Access Times of 85ns and 100ns
- Quartz Accuracy ±1 Minute a Month at +25°C, Factory Calibrated
- BCD-Coded Year, Month, Date, Day, Hours, Minutes, and Seconds with Leap Year Compensation Valid Up to 2100
- Power-Fail Write Protection Allows for ±10% V_{CC} Power Supply Tolerance
- Lithium Energy Source is Electrically Disconnected to Retain Freshness Until Power is Applied for the First Time
- UL Recognized

PIN CONFIGURATION

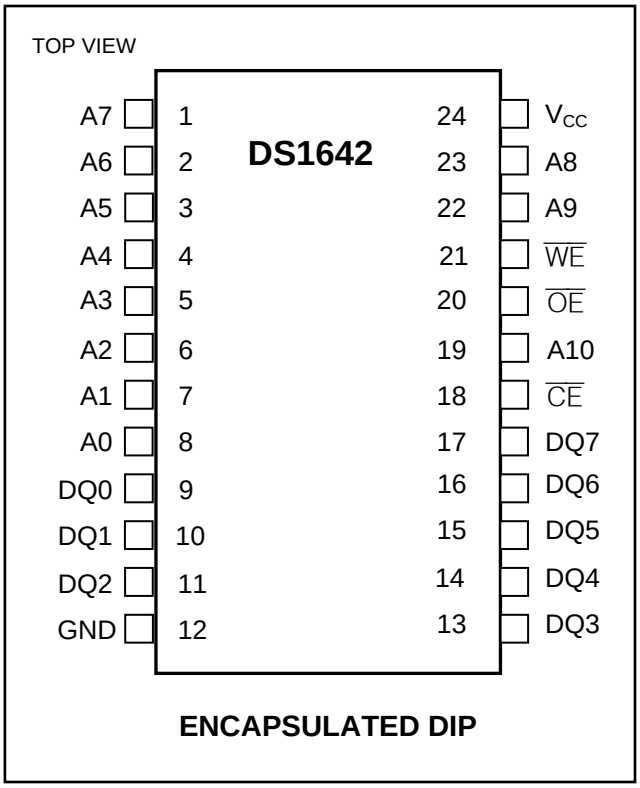

ORDERING INFORMATION

PART	VOLTAGE RANGE (V)	TEMP RANGE	PIN-PACKAGE	TOP MARK
DS1642-85+	5.0	0°C to +70°C	24 EDIP (0.720a)	DS1642+85
DS1642-100+	5.0	0°C to +70°C	24 EDIP (0.720a)	DS1642+100

+Denotes a lead(Pb)-free/RoHS-compliant package.

A "+" indicates a lead(Pb)-free product. The top mark will include a "+" symbol on lead-free devices.

PIN DESCRIPTION

PIN	NAME	FUNCTION
1	A7	Address Input
2	A6	
3	A5	
4	A4	
5	A3	
6	A2	
7	A1	
8	A0	
19	A10	
22	A9	
23	A8	
9	DQ0	Data Input/Output
10	DQ1	
11	DQ2	
13	DQ3	
14	DQ4	
15	DQ5	
16	DQ6	
17	DQ7	
12	GND	Ground
18	$\overline{CE}$	Active-Low Chip-Enable Input
20	$\overline{OE}$	Active-Low Output-Enable Input
21	$\overline{WE}$	Active-Low Write-Enable Input
24	V_{CC}	Power-Supply Input

DESCRIPTION

The DS1642 is a 2k x 8 nonvolatile static RAM and a full-function real-time clock (RTC), both of which are accessible in a bytewide format. The nonvolatile time keeping RAM is pin and function equivalent to any JEDEC-standard 2k x 8 SRAM. The device can also be easily substituted in ROM, EPROM, and EEPROM sockets, providing read/write nonvolatility and the addition of the real-time clock function. The real-time clock information resides in the eight uppermost RAM locations. The RTC registers contain year, month, date, day, hours, minutes, and seconds data in 24-hour BCD format. Corrections for the day of the month and leap year are made automatically. The RTC clock registers are double-buffered to avoid access of incorrect data that can occur during clock update cycles. The double-buffered system also prevents time loss as the timekeeping countdown continues unabated by access to time register data. The DS1642 also contains its own power-fail circuitry, which deselects the device when the V_{CC} supply is in an out-of-tolerance condition. This feature prevents loss of data from unpredictable system operation brought on by low V_{CC} as errant access and update cycles are avoided.

CLOCK OPERATIONS–READING THE CLOCK

While the double-buffered register structure reduces the chance of reading incorrect data, internal updates to the DS1642 clock registers should be halted before clock data is read to prevent reading of data in transition. However, halting the internal clock register updating process does not affect clock accuracy. Updating is halted when a 1 is written into the read bit, the 7th most significant bit in the control register. As long as a 1 remains in that position, updating is halted. After a halt is issued, the registers reflect the count, that is day, date, and time that was current at the moment the halt command was issued. However, the internal clock registers of the double-buffered system continue to update so that the clock accuracy is not affected by the access of data. All of the DS1642 registers are updated simultaneously after the clock status is reset. Updating occurs within a second after the read bit is written to 0.

Figure 1. DS1642 BLOCK DIAGRAM

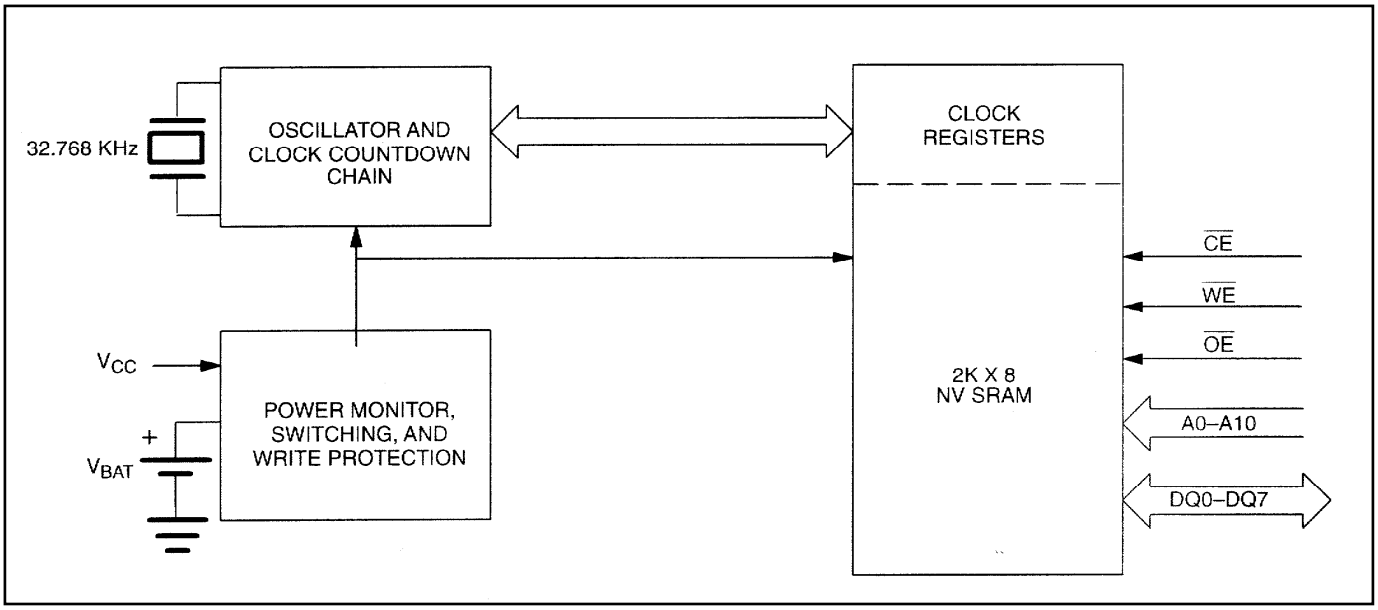

Table 1. TRUTH TABLE

V_{CC}	$\overline{CE}$	$\overline{OE}$	$\overline{WE}$	MODE	DQ	POWER
5V ±10%	V_{IH}	X	X	Deselect	High-Z	Standby
	V_{IL}	X	V_{IL}	Write	Data In	Active
	V_{IL}	V_{IL}	V_{IH}	Read	Data Out	Active
	V_{IL}	V_{IH}	V_{IH}	Read	High-Z	Active
$<4.5V > V_{BAT}$	X	X	X	Deselect	High-Z	CMOS Standby
$<V_{BAT}$	X	X	X	Deselect	High-Z	Data Retention Mode

SETTING THE CLOCK

The 8th bit of the control register is the write bit. Setting the write bit to a 1, like the read bit, halts updates to the DS1642 registers. The user can then load them with the correct day, date and time data in 24-hour BCD format. Resetting the write bit to a 0 then transfers those values to the actual clock counters and allows normal operation to resume.

STOPPING AND STARTING THE CLOCK OSCILLATOR

The clock oscillator may be stopped at any time. To increase the shelf life, the oscillator can be turned off to minimize current drain from the battery. The $\overline{OSC}$ bit is the MSB for the seconds registers. Setting it to a 1 stops the oscillator.

FREQUENCY TEST BIT

Bit 6 of the day byte is the frequency test bit. When the frequency test bit is set to logic 1 and the oscillator is running, the LSB of the seconds register will toggle at 512 Hz. When the seconds register is being read, the DQ0 line will toggle at the 512 Hz frequency as long as conditions for access remain valid (i.e., $\overline{CE}$ low, and $\overline{OE}$ low) and address for seconds register remain valid and stable.

CLOCK ACCURACY

The DS1642 is guaranteed to keep time accuracy to within ±1 minute per month at 25°C. Dallas Semiconductor calibrates the clock at the factory by using special calibration nonvolatile-tuning elements. The DS1642 does not require additional calibration and temperature deviations will have a negligible effect in most applications. For this reason, methods of field clock calibration are not available and not necessary.

Table 2. REGISTER MAP–BANK1

ADDRESS	DATA								FUNCTION	
	B7	B6	B5	B4	B3	B2	B1	B0		
7FF	—	—	—	—	—	—	—	—	Year	00–99
7FE	X	X	X	—	—	—	—	—	Month	01–12
7FD	X	X	—	—	—	—	—	—	Date	01–31
7FC	X	FT	X	X	X	—	—	—	Day	00–23
7FB	X	X	—	—	—	—	—	—	Hour	00–59
7FA	X	—	—	—	—	—	—	—	Minutes	00–59
7F9	$\overline{OSC}$	—	—	—	—	—	—	—	Seconds	00–59
7F8	W	R	X	X	X	X	X	X	Control	A

$\overline{OSC}$ = STOP BIT R = READ BIT FT = FREQUENCY TEST
W = WRITE BIT X = UNUSED

Note: *All indicated "X" bits are not used but must be set to "0" during write cycle to ensure proper clock operation.*

RETRIEVING DATA FROM RAM OR CLOCK

The DS1642 is in the read mode whenever $\overline{WE}$ (write enable) is high, and $\overline{CE}$ (chip enable) is low. The device architecture allows ripple-through access to any of the address locations in the NV SRAM. Valid data will be available at the DQ pins within t_{AA} after the last address input is stable, providing that the $\overline{CE}$ and $\overline{OE}$ access times and states are satisfied. If $\overline{CE}$ or $\overline{OE}$ access times are not met, valid data will be available at the latter of chip enable access (t_{CEA}) or at output enable access time (t_{OEA}). The state of the data input/output pins (DQ) is controlled by $\overline{CE}$ and $\overline{OE}$. If the outputs are activated before t_{AA}, the data lines are driven to an intermediate state until t_{AA}. If the address inputs are changed while $\overline{CE}$ and $\overline{OE}$ remain valid, output data will remain valid for output data hold time (t_{OH}) but will then go indeterminate until the next address access.

WRITING DATA TO RAM OR CLOCK

The DS1642 is in the write mode whenever $\overline{WE}$ and $\overline{CE}$ are in their active state. The start of a write is referenced to the latter occurring transition of $\overline{WE}$ or $\overline{CE}$. The addresses must be held valid throughout the cycle. $\overline{CE}$ or $\overline{WE}$ must return inactive for a minimum of t_{WR} prior to the initiation of another read or write cycle. Data in must be valid t_{DS} prior to the end of write and remain valid for t_{DH} afterward. In a typical application, the $\overline{OE}$ signal will be high during a write cycle. However, $\overline{OE}$ can be active provided that care is taken with the data bus to avoid bus contention. If $\overline{OE}$ is low prior to $\overline{WE}$ transitioning low the data bus can become active with read data defined by the address inputs. A low transition on $\overline{WE}$ will then disable the outputs t_{WEZ} after $\overline{WE}$ goes active.

DATA RETENTION MODE

When V_{CC} is within nominal limits (V_{CC} > 4.5V) the DS1642 can be accessed as described above by read or write cycles. However, when V_{CC} is below the power-fail point V_{PF} (point at which write protection occurs) the internal clock registers and RAM is blocked from access. This is accomplished internally by inhibiting access via the $\overline{CE}$ signal. When V_{CC} falls below the level of the internal battery supply, power input is switched from the V_{CC} pin to the internal battery and clock activity, RAM, and clock data are maintained from the battery until V_{CC} is returned to nominal level.

BATTERY LONGEVITY

The DS1642 has a lithium power source that is designed to provide energy for clock activity, and clock and RAM data retention when the V_{CC} supply is not present. The capability of this internal power supply is sufficient to power the DS1642 continuously for the life of the equipment in which it is installed. For specification purposes, the life expectancy is 10 years at 25°C with the internal clock oscillator running in the absence of V_{CC} power. Each DS1642 is shipped from Dallas Semiconductor with its lithium energy source disconnected, guaranteeing full energy capacity. When V_{CC} is first applied at a level greater than V_{PF}, the lithium energy source is enabled for battery backup operation. Actual life expectancy of the DS1642 will be much longer than 10 years since no lithium battery energy is consumed when V_{CC} is present.

ABSOLUTE MAXIMUM RATINGS

Voltage Range on Any Pin Relative to Ground……..-0.3V to +6.0V
Operating Temperature Range……...0°C to +70°C (noncondensing)
Storage Temperature Range…… -40°C to +85°C (noncondensing)
Lead Temperature (soldering, 10 seconds)
Note: Hand or wave-soldered only (Note 6) …….. . . . . ……..……. . . . . …..+260°C

This is a stress rating only and functional operation of the device at these or any other conditions above those indicated in the operation sections of this specification is not implied. Exposure to absolute maximum rating conditions for extended periods of time may affect reliability.

RECOMMENDED DC OPERATING CONDITIONS

PARAMETER	SYMBOL	MIN	TYP	MAX	UNITS	NOTES
Logic 1 Voltage (All Inputs)	V_{IH}	2.2		V_{CC} + 0.3	V	1
Logic 0 Voltage (All Inputs)	V_{IL}	-0.3		0.8	V	1

DC ELECTRICAL CHARACTERISTICS

PARAMETER	SYMBOL	MIN	TYP	MAX	UNITS	NOTES
Active Supply Current	I_{CC}		15	50	mA	2, 3
TTL Standby Current ($\overline{CE}$ = V_{IH})	I_{CC1}		1	3	mA	2, 3
CMOS Standby Current ($\overline{CE}$ $\leq$ V_{CC} - 0.2V)	I_{CC2}		1	3	mA	2, 3
Input Leakage Current (Any Input)	I_{IL}	-1		+1	µA	
I/O Leakage Current (Any Output)	I_{OL}	-1		+1	µA	
Output Logic 1 Voltage (I_{OUT} = -1.0mA)	V_{OH}	2.4				1
Output Logic 0 Voltage (I_{OUT} = +2.1mA)	V_{OL}			0.4		1
Write Protection Voltage	V_{PF}	4.25	4.37	4.50	V	1

AC CHARACTERISTICS—READ CYCLE

PARAMETER	SYMBOL	85ns ACCESS		100ns ACCESS		UNITS	NOTES
		MIN	MAX	MIN	MAX		
Read Cycle Time	t_{RC}	85		100		ns	
Address Access Time	t_{AA}		85		100	ns	
$\overline{CE}$ to DQ Low-Z	t_{CEL}	5		5		ns	
$\overline{CE}$ Access Time	t_{CEA}		85		100	ns	
$\overline{CE}$ Data Off Time	t_{CEZ}		30		35	ns	
$\overline{OE}$ to DQ Low-Z	t_{OEL}	5		5		ns	
$\overline{OE}$ Access Time	t_{OEA}		45		55	ns	
$\overline{OE}$ Data Off Time	t_{OEZ}		30		35	ns	
Output Hold from Address	t_{OH}	5		5		ns	

READ CYCLE TIMING DIAGRAM

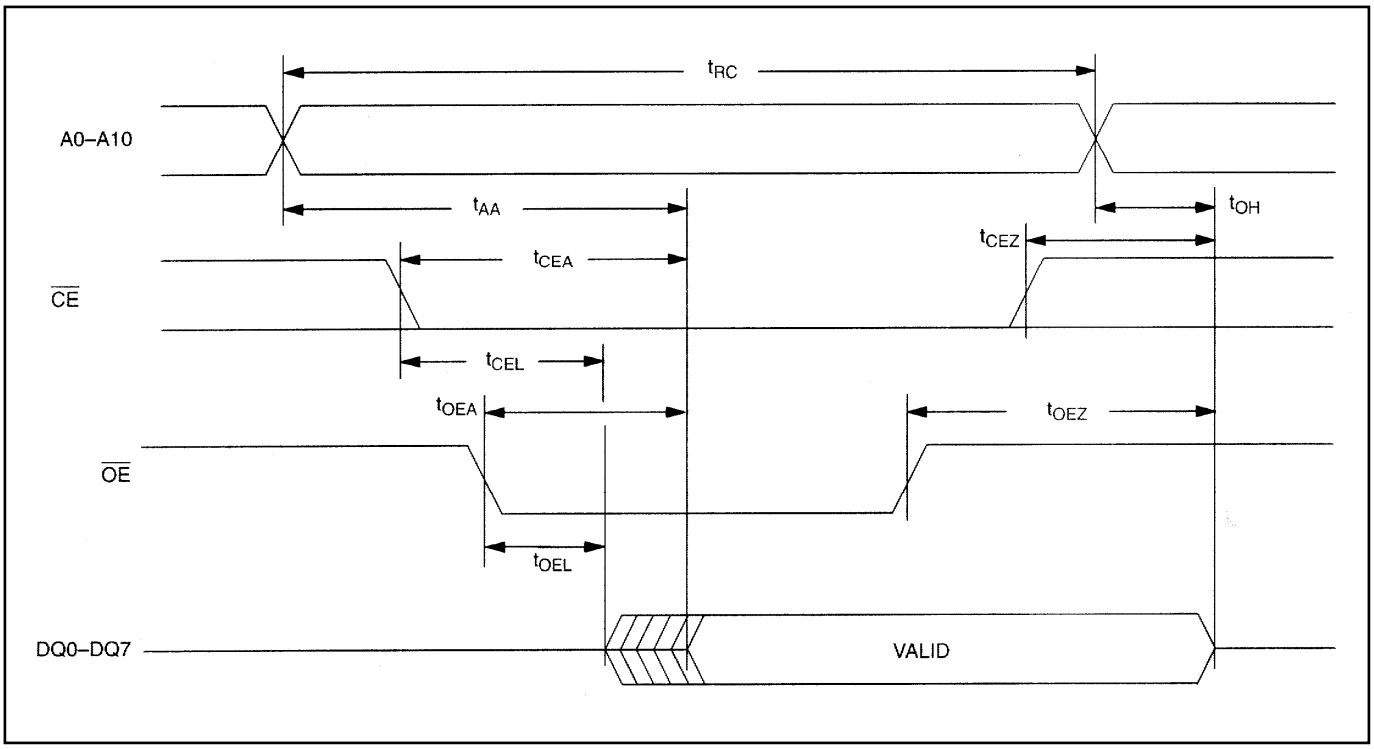

AC CHARACTERISTICS—WRITE CYCLE

(V_{CC} = 5.0V ±10, T_A = 0°C to +70°C.)

PARAMETER	SYMBOL	85ns ACCESS		100ns ACCESS		UNITS	NOTES
		MIN	MAX	MIN	MAX		
Write Cycle Time	t_{WC}	85		100		ns	
Address Setup Time	t_{AS}	0		0		ns	
$\overline{WE}$ Pulse Width	t_{WEW}	65		70		ns	
$\overline{CE}$ Pulse Width	t_{CEW}	70		75		ns	
Data Setup Time	t_{DS}	35		40		ns	
Data Hold Time	t_{DH}	0		0		ns	
Address Hold Time	t_{AH}	5		5		ns	
$\overline{WE}$ Data Off Time	t_{WEZ}		30		35	ns	
Write Recovery Time	t_{WR}	5		5		ns	

WRITE CYCLE TIMING DIAGRAM—WRITE-ENABLE CONTROLLED

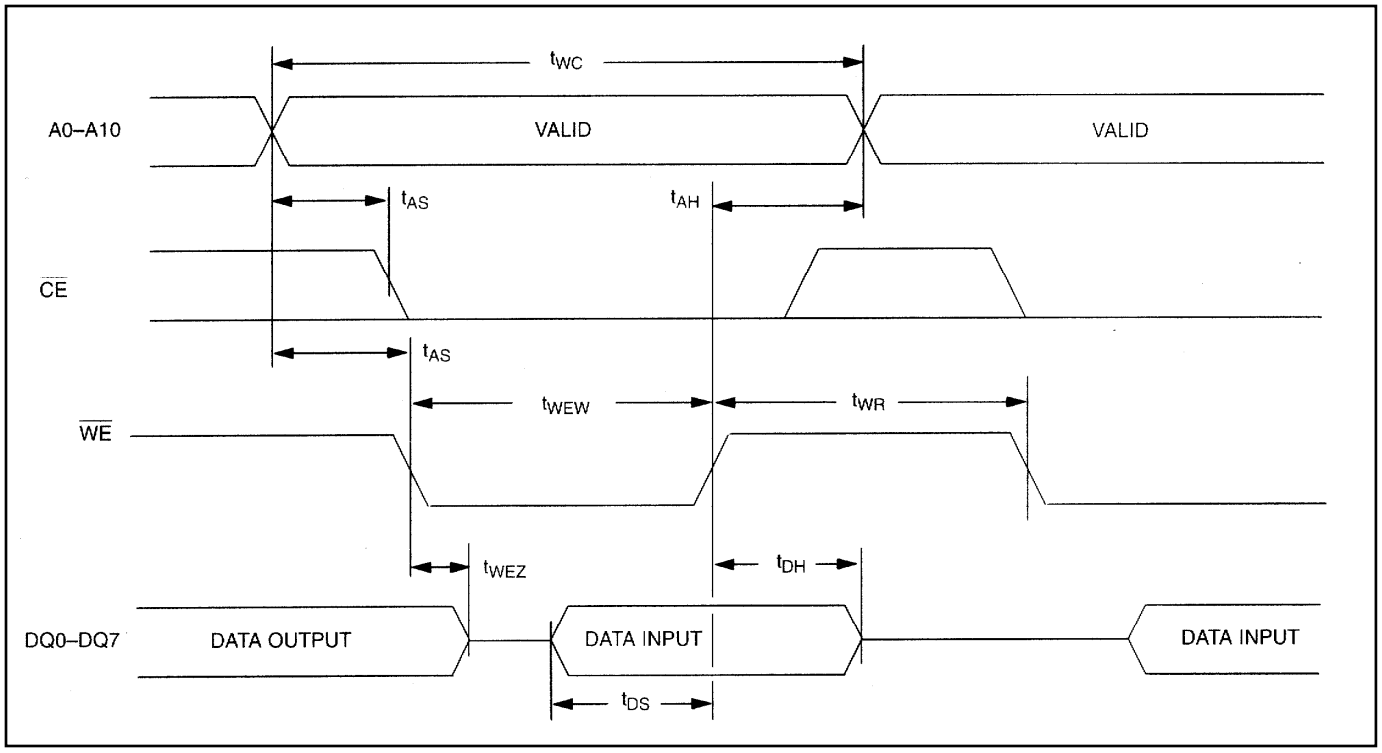

WRITE CYCLE TIMING DIAGRAM—CHIP-ENABLE CONTROLLED

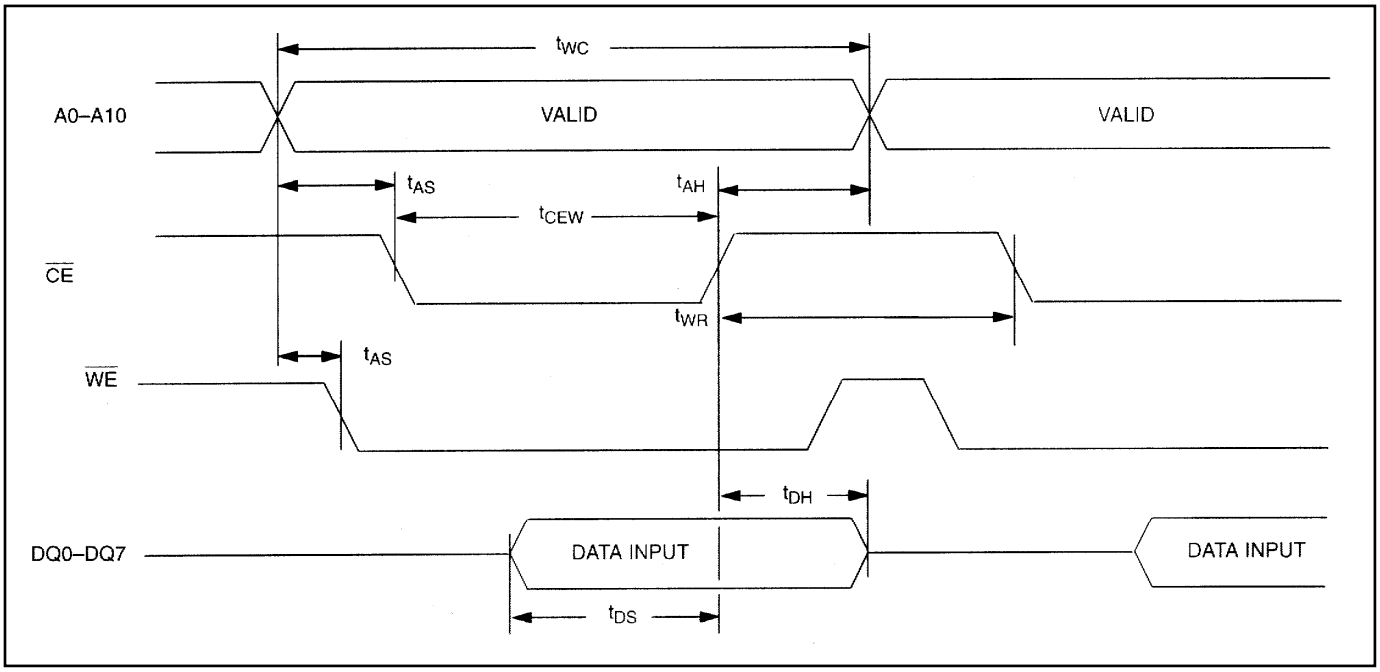

POWER-UP/POWER-DOWN AC CHARACTERISTICS

(T_A = 0°C to +70°C)

PARAMETER	SYMBOL	MIN	TYP	MAX	UNITS	NOTES
$\overline{CE}$ or $\overline{WE}$ at V_{IH} Before Power-Down	t_{PD}	0			µs	
V_{CC} Fall Time: V_{PF} (MAX) to V_{PF} (MIN)	t_F	300			µs	
V_{CC} Fall Time: V_{PF} (MIN) to V_{BAT}	t_{FB}	10			µs	
V_{CC} Rise Time: V_{PF} (MIN) to V_{PF} (MAX)	t_R	0			µs	
Power-up Recover Time	t_{REC}			35	ms	
Expected Data Retention Time (Oscillator On)	t_{DR}	10			years	4, 5

POWER-UP/POWER-DOWN WAVEFORM TIMING

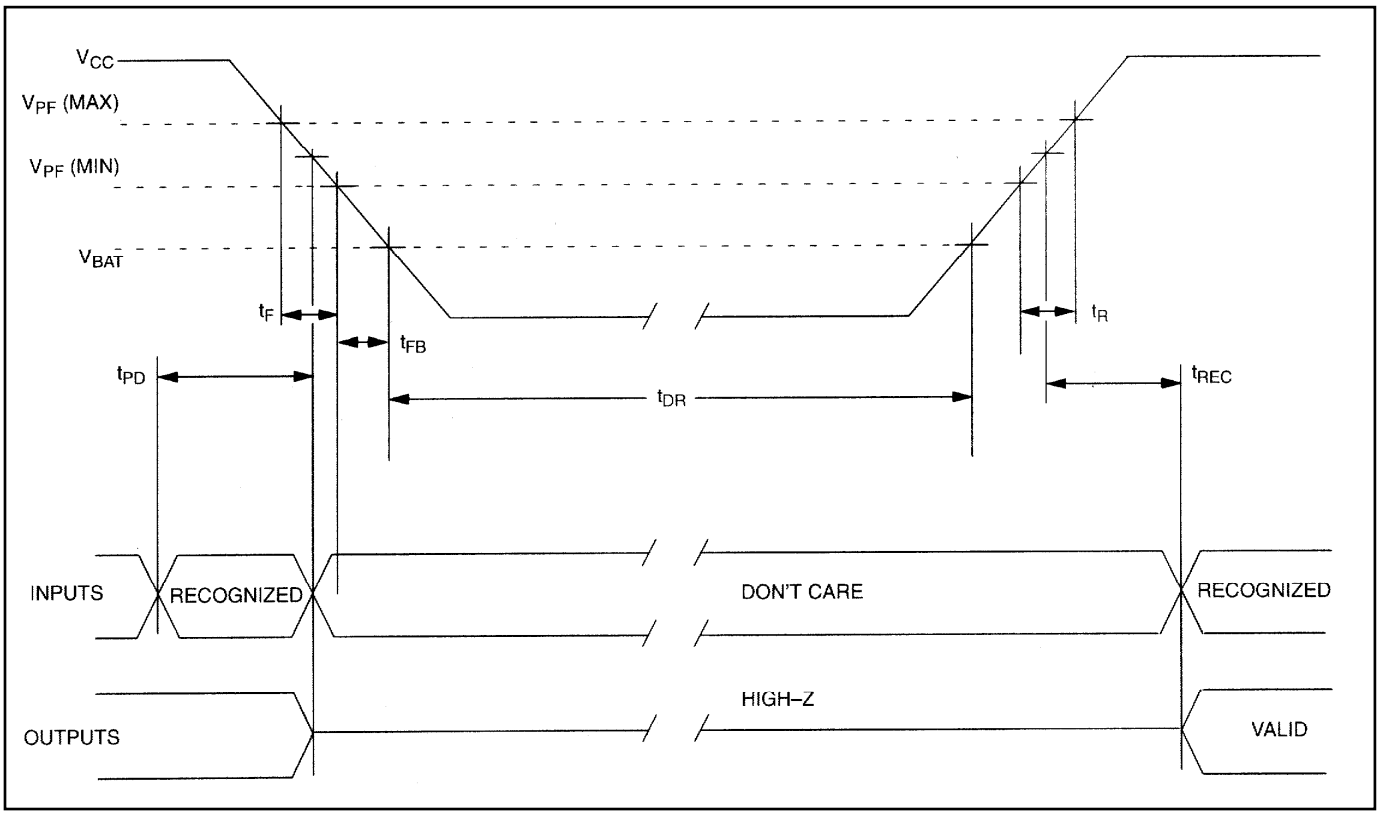

CAPACITANCE

(T_A = +25°C)

PARAMETER	SYMBOL	MIN	TYP	MAX	UNITS	NOTES
Capacitance on All Pins (except DQ)	C_{IN}			7	pF	
Capacitance on DQ Pins	C_O			10	pF	

AC TEST CONDITIONS

Output Load: 100pF + 1TTL Gate
Input Pulse Levels: 0.0 to 3.0V
Timing Measurement Reference Levels:
    Input: 1.5V
    Output: 1.5V
Input Pulse Rise and Fall Times: 5ns

NOTES:

1) Voltages are referenced to ground.
2) Typical values are at 25°C and nominal supplies.
3) Outputs are open.
4) Data retention time is at 25°C.
5) Each DS1642 has a built-in switch that disconnects the lithium source until V_{CC} is first applied by the user. The expected t_{DR} is defined as a cumulative time in the absence of V_{CC} starting from the time power is first applied by the user.
6) Real-time clock modules can be successfully processed through conventional wave-soldering techniques as long as temperature exposure to the lithium energy source contained within does not exceed +85°C. Post-solder cleaning with water washing techniques is acceptable, provided that ultrasonic vibration is not used to prevent damage to the crystal.

PACKAGE INFORMATION

For the latest package outline information and land patterns, go to **www.maxim-ic.com/packages**. Note that a "+", "#", or "-" in the package code indicates RoHS status only. Package drawings may show a different suffix character, but the drawing pertains to the package regardless of RoHS status.

PACKAGE TYPE	PACKAGE CODE	DOCUMENT NO.
24 EDIP	MDF24+1	**21-0245**

DS1642 24-PIN PACKAGE

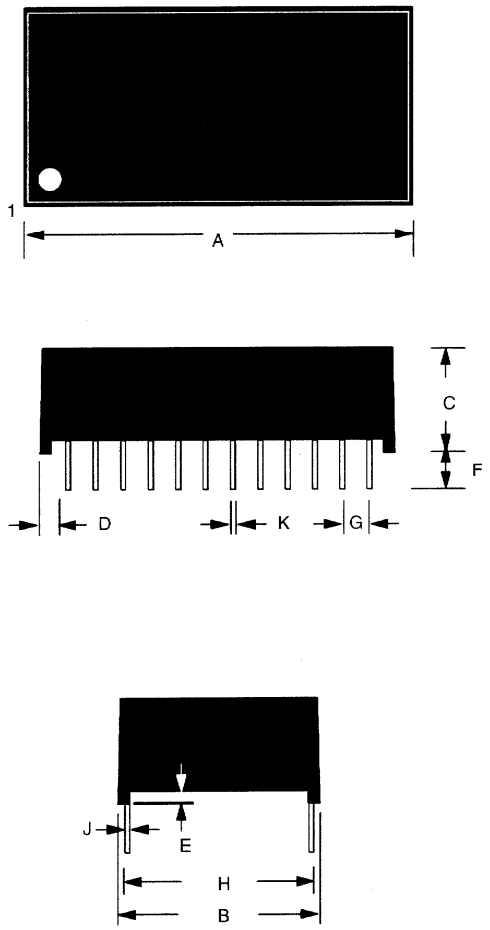

PKG	24-PIN	
DIM.	MIN	MAX
A IN.	1.270	1.290
MM	37.34	37.85
B IN.	0.675	0.700
MM	17.15	17.78
C IN.	0.315	0.335
MM	8.00	78.51
D IN.	0.075	0.105
MM	1.91	2.67
E IN.	0.015	0.030
MM	0.38	0.76
F IN.	0.140	0.180
MM	3.56	4.57
G IN.	0.090	0.110
MM	2.29	2.79
H IN.	0.590	0.630
MM	14.99	16.00
J IN.	0.010	0.018
MM	0.25	0.45
K IN.	0.015	0.025
MM	0.43	0.58

REVISION HISTORY

REVISION DATE	DESCRIPTION	PAGES CHANGED
5/10	Removed TinLead and -70 (70ns) and added -85 (85ns) in the *Ordering Information* table; reduced the *Absolute Maximum Ratings* max voltage; updated the soldering information; updated AC timing to include 85ns	1, 6, 7, 8

Maxim cannot assume responsibility for use of any circuitry other than circuitry entirely embodied in a Maxim product. No circuit patent licenses are implied. Maxim reserves the right to change the circuitry and specifications without notice at any time.

Maxim Integrated Products, 120 San Gabriel Drive, Sunnyvale, CA 94086 408-737-7600

© 2010 Maxim Integrated Products

Maxim is a registered trademark of Maxim Integrated Products, Inc. The Dallas logo is a registered trademark of Maxim Integrated Products, Inc.

О компании

ООО "ТрейдЭлектроникс" - это оперативные поставки широкого спектра электронных компонентов отечественного и импортного производства напрямую от производителей и с крупнейших мировых складов. Реализуемая нашей компанией продукция насчитывает более полумиллиона наименований.

Благодаря этому наша компания предлагает к поставке практически не ограниченный ассортимент компонентов как оптовыми, мелкооптовыми партиями, так и в розницу.

Наличие собственной эффективной системы логистики обеспечивает надежную поставку продукции по конкурентным ценам в точно указанные сроки.

Срок поставки со стоков в **Европе и Америке – от 3 до 14 дней.**

Срок поставки из **Азии – от 10 дней.**

Благодаря развитой сети поставщиков, помогаем в поиске и приобретении экзотичных или снятых с производства компонентов.

Предоставляем спец цены на элементы для создания инженерных сэмплов.

Упорный труд, качественный результат дают нам право быть уверенными в себе и надежными для наших клиентов.

Наша компания это:

- Гарантия качества поставляемой продукции
- Широкий ассортимент
- Минимальные сроки поставок
- Техническая поддержка
- Подбор комплектации
- Индивидуальный подход
- Гибкое ценообразование

Наша организация особенно сильна в поставках модулей, микросхем, пассивных компонентов, ксайленсах (XC), EPF, EPM и силовой электроники.

Большой выбор предлагаемой продукции, различные виды оплаты и доставки, позволят Вам сэкономить время и получить максимум выгоды от сотрудничества с нами!

Trade Electronics.ru

гарантия бесперебойности производства и качества выпускаемой продукции

Перечень производителей, продукцию которых мы поставляем на российский рынок

AMD
ANALOG DEVICES
BOURNS
Coilcraft
élantec Semiconductor, Inc.
HARRIS
Infineon
JRC
MICREL
MOTOROLA
nichicon
PHILIPS
ROHM
SGS-THOMSON
Sipex
TAIYO YUDEN
TOKO
ZILOG
Winbond
Allegro
ATMEL
BURR - BROWN
EXAR
HITACHI
intel
Lattice
muRata
OKI
QUALCOMM
SAMSUNG
SHARP
SONY
TDK
TOSHIBA
KYOCERA
ALTERA
AVX
CITILYST
CYPRESS
FAIRCHILD SEMICONDUCTOR
HOLTEK
International IOR Rectifier
LINEAR TECHNOLOGY
MITSUBISHI
National Semiconductor
ON Semiconductor
REALTEK
SANYO
SHINDENGEN
SGS
TECCOR
TUNDRA
XILINX
Amphenol
Bay Linear
CIRRUS LOGIC
DALLAS
FUJITSU
IDT
intersil
MAXIM
molex
NEC
Panasonic
RENESAS
SII
SIEMENS
ST
Texas Instruments
VISHAY
ZETEX SEMICONDUCTORS

Trade Electronics.ru

гарантия бесперебойности производства и качества выпускаемой продукции

С удовольствием будем прорабатывать для Вас поставки всех необходимых компонентов по текущим запросам для скорейшего выявления групп элементов, по которым сотрудничество именно с нашей компанией будет для Вас максимально выгодным!

С уважением,

Менеджер отдела продаж ООО

«Трейд Электроникс»

Шишлаков Евгений

8 (495)668-30-28 доб 169

manager28@tradeelectronics.ru

http://www.tradeelectronics.ru/