THIS DRAWING IS UNPUBLISHED. RELEASED FOR PUBLICATION -,- .
© COPYRIGHT - BY TYCO ELECTRONICS CORPORATION. ALL RIGHTS RESERVED.

LOC	DIST
DW	—

REVISIONS

P	LTR	DESCRIPTION	DATE	DWN	APVD
	G	REVISED (ECR-11-006592)	07APR11	JC	WK

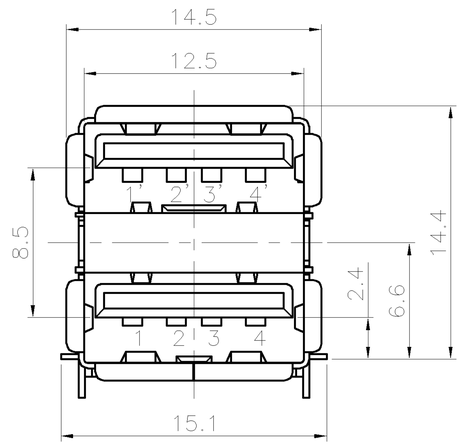

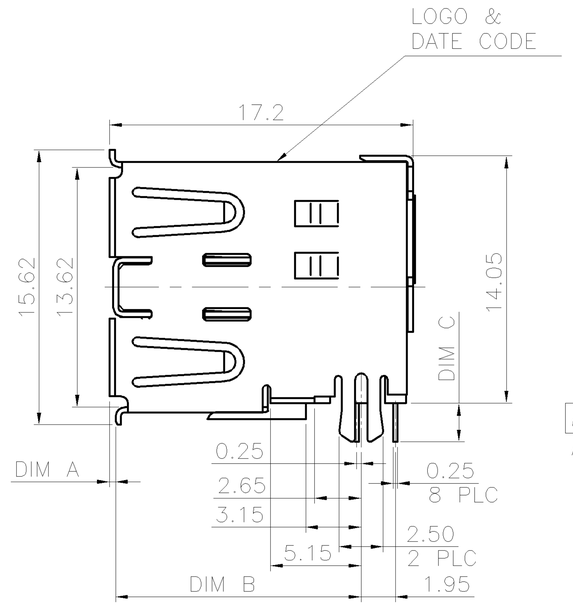

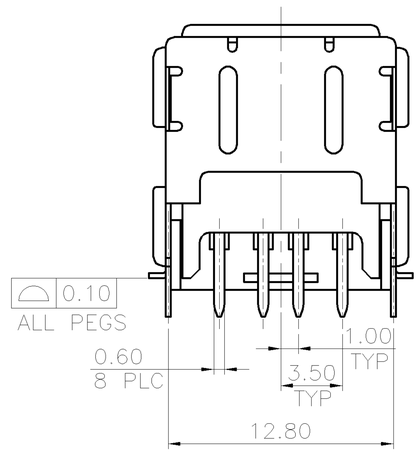

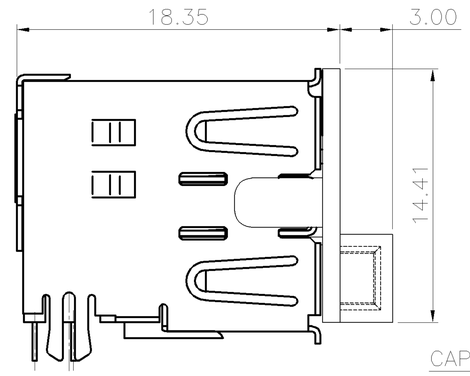

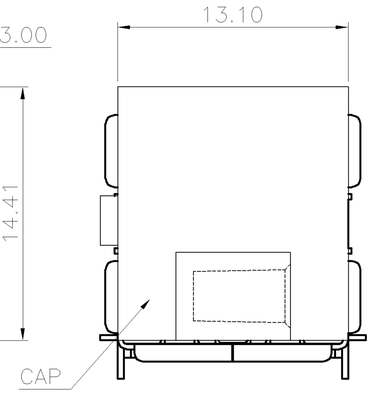

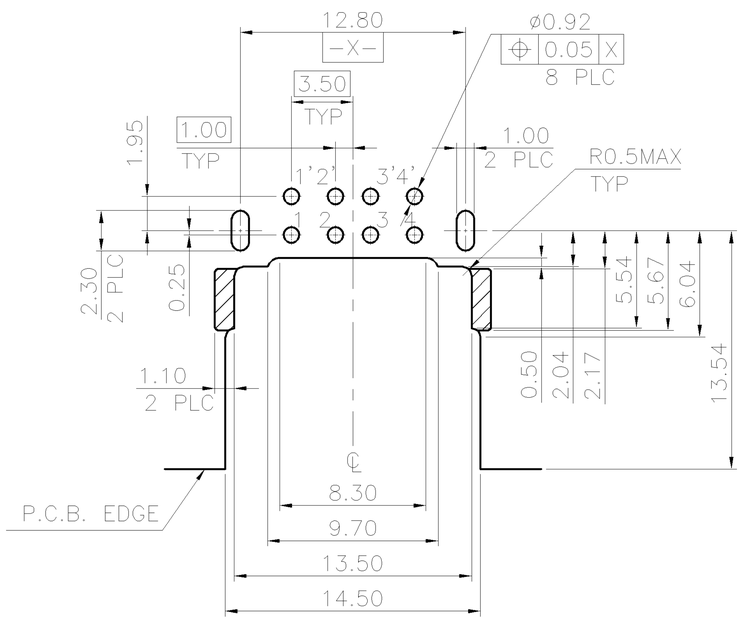

RECOMMEND P.C.B LAYOUT (THICKNESS 1.2~1.4mm)
(COMPONENT SIDE) TOLERANCE±0.05mm

NOTES:
1. MATERIAL:
   HOUSING: PA9T WITH 30% GF, UL 94V-0 RATED, BLACK COLOR.
   SPACER: PA9T WITH 30% GF, UL 94V-0 RATED, BLACK COLOR.
   CAP: PA9T WITH 30% GF, UL 94V-0 RATED, BLACK COLOR.
   CONTACT: PHOSPHOR BRONZE.
   FRONT SHIELD: BRASS.
   REAR SHIELD: SPCC.
   GROUNDING STRIP: BRASS.
2. FINISH:
   CONTACT: 0.762μm [30μ"] MIN. GOLD PLATING ON CONTACT AREA.
   3.048μm [120μ"] MIN. MATTE TIN PLATING ON SOLDER TAILS,
   WITH ENTIREC CONTACT UNDERPLATED 1.27mμ" [50μ"] MIN. NICKEL.
   FRONT SHIELD: 0.762μm [30μ"] MIN. NICKEL PLATING.
   0.762μm [30μ"] MIN. Cu UNDER PLATING OVERALL.
   REAR SHIELD: 0.762μm [30μ"] MIN. NICKEL PLATING.
   0.762μm [30μ"] MIN. Cu UNDER PLATING OVERALL.
   GROUNDING STRIP: 0.762μm [30μ"] MIN. NICKEL PLATING.
   0.762μm [30μ"] MIN. Cu UNDER PLATING OVERALL.
3. REFLOW SOLDER CAPABLE TO 260°C PER TE SPEC 109-201, CONDITION B.

DIM C	DIM B	DIM A	CAP	PACKAGE	PART NUMBER	NOTE
1.90	14.30	0	W/	TAPE & REEL	1734062-3	
2.20	13.95	0.35	W/O	TUBE	1734062-2	OBSOLETED
				TAPE & REEL	1734062-1	

THIS DRAWING IS A CONTROLLED DOCUMENT.

DIMENSIONS: MM

TOLERANCES UNLESS OTHERWISE SPECIFIED:

0 PLC	± -
1 PLC	± 0.35
2 PLC	± 0.25
3 PLC	± -
4 PLC	± -
ANGLES	± 3°

MATERIAL: SEE NOTE

FINISH: SEE NOTE

DWN F. YANG 10SEP2009
CHK S. CHIEN 10SEP2009
APVD W. KODAMA 10SEP2009

PRODUCT SPEC 108-57481

QUALIFICATION TEST REPORT 501-57557

WEIGHT 4.71 GRAMS

CUSTOMER DRAWING

TE Connectivity

NAME: USB CONNECTOR, A SERIES, STACKED, OFFSET TYPE

SIZE	CAGE CODE	DRAWING NO	RESTRICTED TO
A3	00779	C-1734062	—

SCALE — SHEET 1 OF 24 REV G

THIS DRAWING IS UNPUBLISHED. RELEASED FOR PUBLICATION -,- .
© COPYRIGHT - BY TYCO ELECTRONICS CORPORATION. ALL RIGHTS RESERVED.

LOC	DIST
DW	—

REVISIONS

P	LTR	DESCRIPTION	DATE	DWN	APVD
		SEE SHEET 1.			

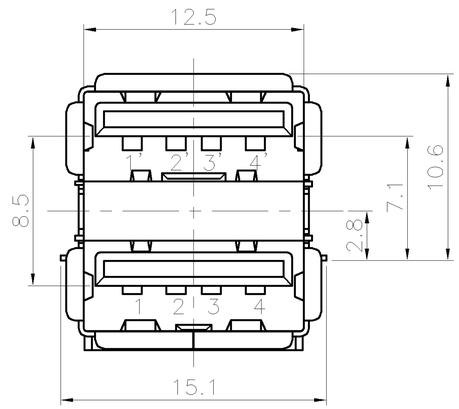

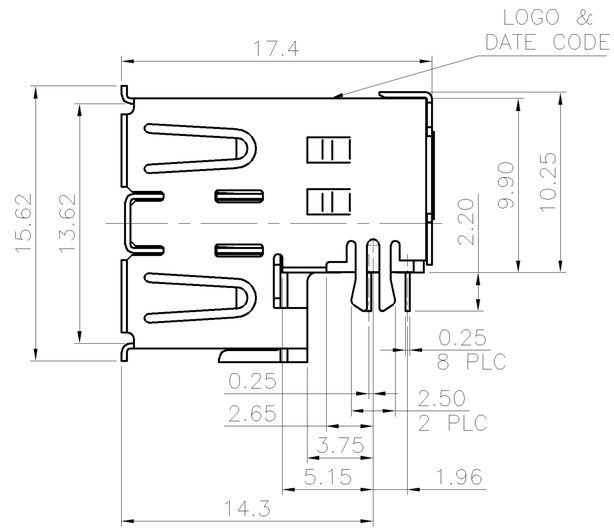

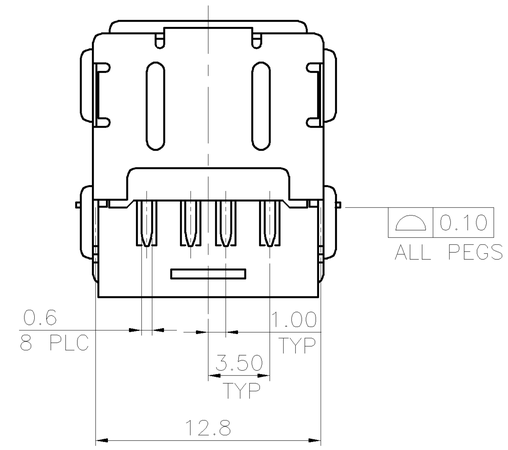

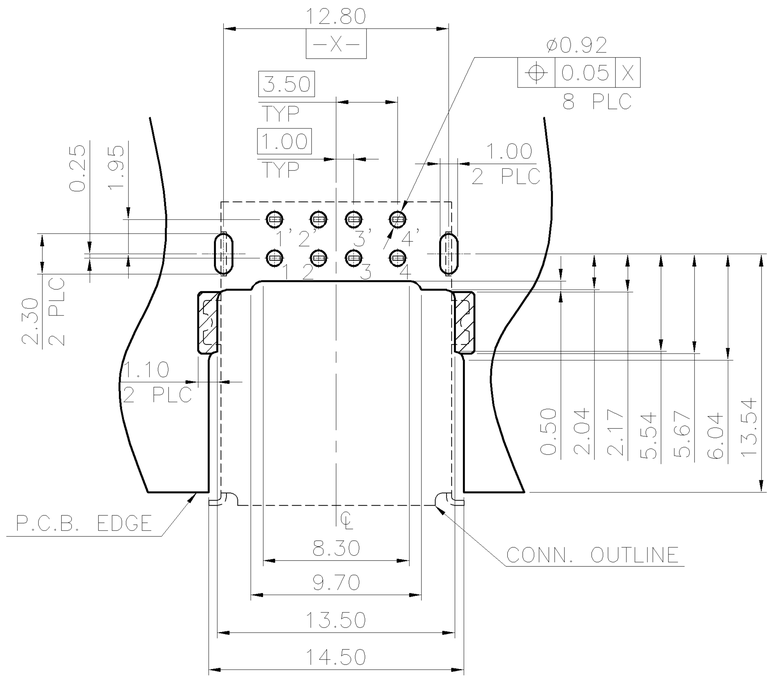

RECOMMEND P.C.B LAYOUT (THICKNESS 1.2~1.4mm)
(COMPONENT SIDE) TOLERANCE±0.05mm

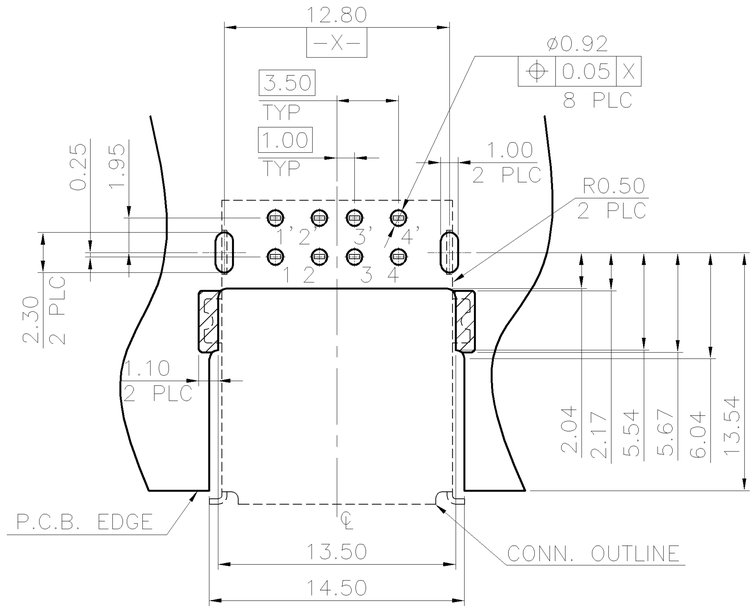

RECOMMEND P.C.B LAYOUT (THICKNESS 1.2~1.4mm)
(COMPONENT SIDE) TOLERANCE±0.05mm

NOTE:
1. MATERIAL:
   HOUSING: PA9T WITH 30% GF, UL 94V-0 RATED, BLACK COLOR.
   SPACER: PA9T WITH 30% GF, UL 94V-0 RATED, BLACK COLOR.
   CONTACT: PHOSPHOR BRONZE.
   FRONT SHIELD: BRASS.
   REAR SHIELD: SPCC.
   GROUNDING STRIP: BRASS.
2. FINISH:
   CONTACT: 0.762μm [30μ"] MIN. GOLD PLATING ON CONTACT AREA.
   3.048μm [120μ"] MIN. BRIGHT TIN PLATING ON SOLDER TAILS,
   WITH ENTIREC CONTACT UNDERPLATED 1.27μm [50μ"] MIN. NICKEL.
   FRONT SHIELD: 0.762μm [30μ"] MIN. NICKEL PLATING.
   0.762μm [30μ"] MIN. Cu UNDER PLATING OVERALL.
   REAR SHIELD: 0.762μm [30μ"] MIN. NICKEL PLATING.
   0.762μm [30μ"] MIN. Cu UNDER PLATING OVERALL.
   GROUNDING STRIP: 0.762μm [30μ"] MIN. NICKEL PLATING.
   0.762μm [30μ"] MIN. Cu UNDER PLATING OVERALL.
3. REFLOW SOLDER CAPABLE TO 260°C PER TE SPEC 109-201, CONDITION B.

NOTE	PACKAGE	PART NUMBER
OBSOLETED	TUBE	1-1734062-2
	TAPE & REEL	1-1734062-1

THIS DRAWING IS A CONTROLLED DOCUMENT.

DIMENSIONS: MM

TOLERANCES UNLESS OTHERWISE SPECIFIED:

0 PLC	± -
1 PLC	± 0.35
2 PLC	± 0.25
3 PLC	± -
4 PLC	± -
ANGLES	± 3°

MATERIAL: SEE NOTE

FINISH: SEE NOTE

DWN
CHK
APVD
PRODUCT SPEC
QUALIFICATION TEST REPORT
WEIGHT 4.71 GRAMS

TE Connectivity

NAME: USB CONNECTOR, A SERIES, STACKED, OFFSET TYPE

SIZE	CAGE CODE	DRAWING NO	RESTRICTED TO
A3	00779	C-1734062	—

CUSTOMER DRAWING | SCALE — | SHEET 2 OF 24 | REV G

THIS DRAWING IS UNPUBLISHED. RELEASED FOR PUBLICATION -,- .
© COPYRIGHT - BY TYCO ELECTRONICS CORPORATION. ALL RIGHTS RESERVED.

LOC	DIST
DW	—

REVISIONS

P	LTR	DESCRIPTION	DATE	DWN	APVD
		SEE SHEET 1.			

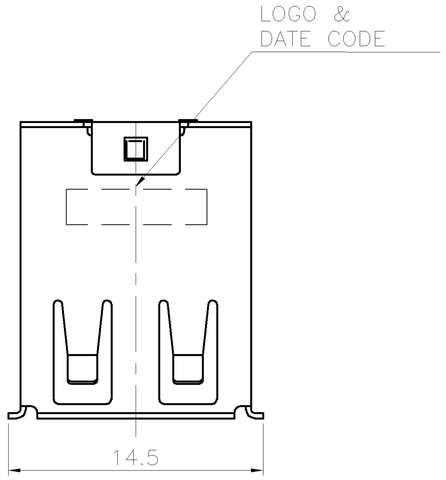

NOTE:
1. MATERIAL:
   HOUSING: PA9T WITH 30% GF, UL 94V-0 RATED, BLACK COLOR.
   SPACER: PA9T WITH 30% GF, UL 94V-0 RATED, BLACK COLOR.
   CONTACT: PHOSPHOR BRONZE.
   FRONT SHIELD: BRASS.
   REAR SHIELD: SPCC.
   GROUNDING STRIP: BRASS.
2. FINISH:
   CONTACT: 0.76μ"m [30μ"] MIN. GOLD PLATING ON CONTACT AREA.
   3.048μ"m [120μ"] MIN. BRIGHT TIN PLATING ON SOLDER TAIL,
   WITH ENTIRE CONTACT UNDERPLATED 1.27mμ" [50μ"] MIN. NICKEL.
   FRONT SHIELD: 0.76μ"m [30μ"] MIN. NICKEL PLATING.
   0.76μ"m [30μ"] MIN. Cu UNDER PLATING OVERALL.
   REAR SHIELD: 0.762μm [30μ"] MIN. NICKEL PLATING.
   0.762μm [30μ"] MIN. Cu UNDER PLATING OVERALL.
   GROUNDING STRIP: 0.762μm [30μ"] MIN. NICKEL PLATING.
   0.762μm [30μ"] MIN. Cu UNDER PLATING OVERALL.
3. REFLOW SOLDER CAPABLE TO 260°C PER TE
   SPEC 109-201, CONDITION B.

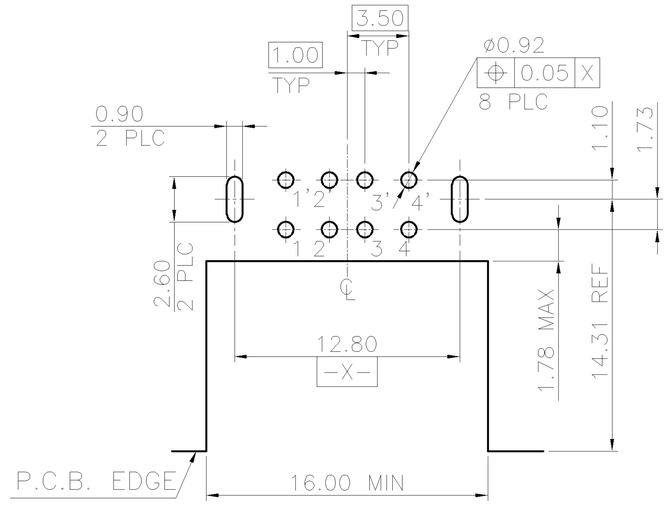

RECOMMEND P.C.B LAYOUT (THICKNESS 1.2mm)
(COMPONENT SIDE) TOLERANCE±0.05mm

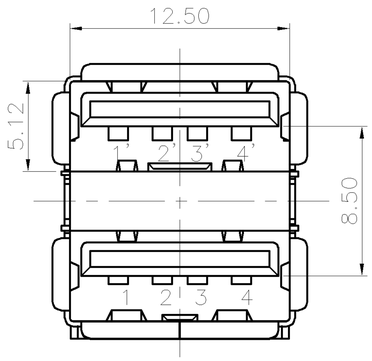

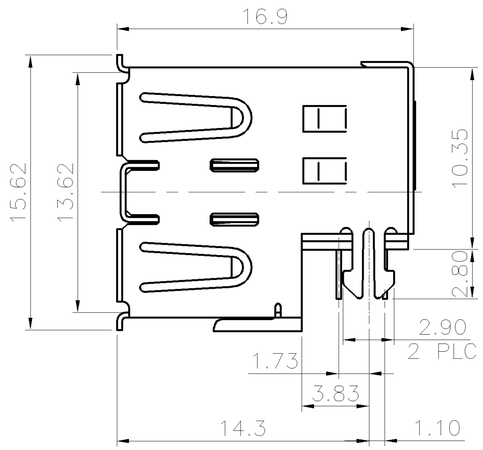

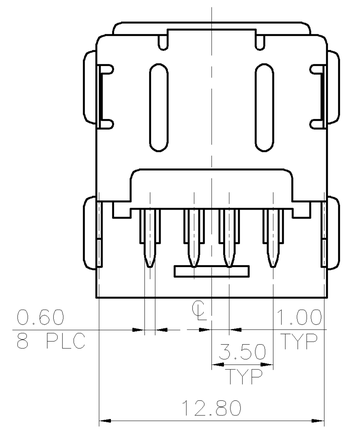

TRAY	2-1734062-2
TUBE	2-1734062-1
PACKAGE	PART NUMBER

THIS DRAWING IS A CONTROLLED DOCUMENT.

DIMENSIONS: MM

TOLERANCES UNLESS OTHERWISE SPECIFIED:

0 PLC	± -
1 PLC	± 0.35
2 PLC	± 0.25
3 PLC	± -
4 PLC	± -
ANGLES	± 3°

MATERIAL: SEE NOTE

FINISH: SEE NOTE

DWN
CHK
APVD
PRODUCT SPEC
QUALIFICATION TEST REPORT
WEIGHT 4.71 GRAMS

TE Connectivity

NAME: USB CONNECTOR, A SERIES, STACKED, OFFSET TYPE

SIZE	CAGE CODE	DRAWING NO	RESTRICTED TO
A3	00779	C-1734062	—

CUSTOMER DRAWING | SCALE — | SHEET 3 OF 24 | REV G

THIS DRAWING IS UNPUBLISHED. RELEASED FOR PUBLICATION -,- .
© COPYRIGHT - BY TYCO ELECTRONICS CORPORATION. ALL RIGHTS RESERVED.

LOC	DIST
DW	—

REVISIONS

P	LTR	DESCRIPTION	DATE	DWN	APVD
		SEE SHEET 1.			

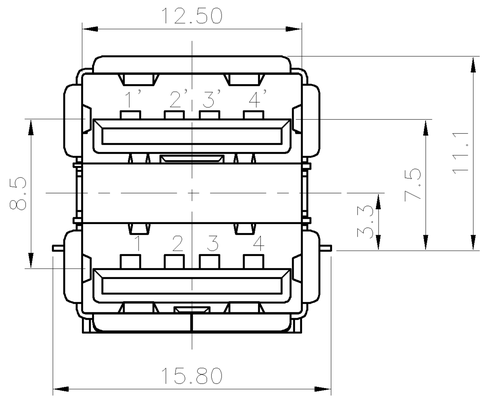

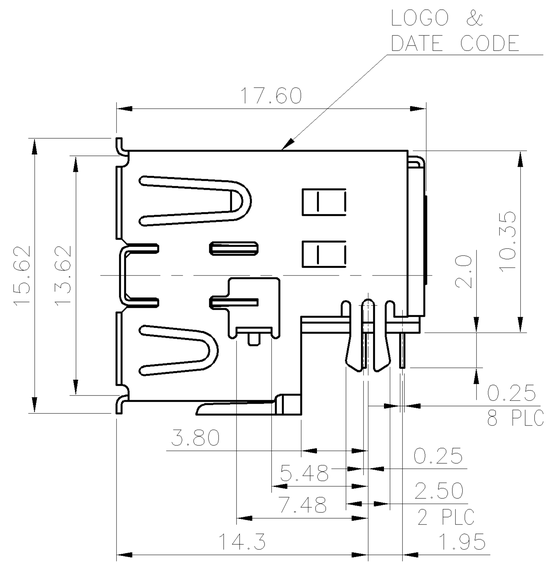

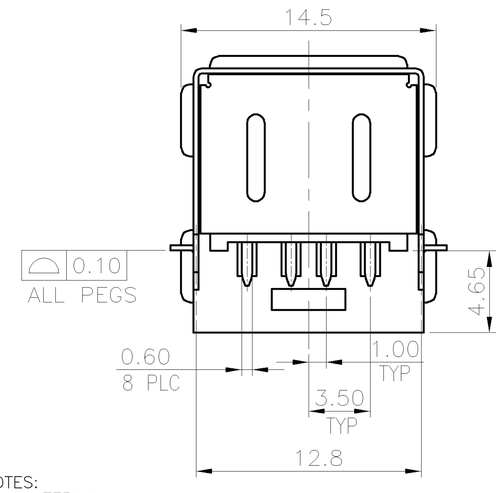

NOTES:
1. MATERIAL:
   HOUSING: PA9T WITH 30% GF, UL 94V-0 RATED, BLACK COLOR.
   SPACER: PA9T WITH 30% GF, UL 94V-0 RATED, BLACK COLOR.
   CONTACT: PHOSPHOR BRONZE.
   FRONT SHIELD: BRASS.
   REAR SHIELD: SPCC.
   GROUNDING STRIP: STAINLESS.
2. FINISH:
   CONTACT: 0.762μm [30μ"] MIN. GOLD PLATING ON CONTACT AREA.
   3.048μm [120μ"] MIN. MATTE TIN PLATING ON SOLDER TAILS,
   1.27μm [50μ"] MIN. NICKEL UNDERPLATED WITH ENTIRE CONTACT .
   FRONT SHIELD: 0.762μm [30μ"] MIN. NICKEL PLATING.
   0.762μm [30μ"] MIN. Cu UNDER PLATING OVERALL.
   REAR SHIELD: 0.762μm [30μ"] MIN. NICKEL PLATING.
   0.762μm [30μ"] MIN. Cu UNDER PLATING OVERALL.
3. FINISH:
   CONTACT: 0.254μm [10μ"] MIN. GOLD PLATING ON CONTACT AREA.
   3.048μm [120μ"] MIN. MATTE TIN PLATING ON SOLDER TAILS,
   1.27μm [50μ"] MIN. NICKEL UNDERPLATED WITH ENTIRE CONTACT.
   FRONT SHIELD: 0.762μm [30μ"] MIN. NICKEL PLATING.
   0.762μm [30μ"] MIN. Cu UNDER PLATING OVERALL.
   SPUTTERING/BLACK PLATING IN FRONT SURFACE.
   REAR SHIELD: 0.762μm [30μ"] MIN. NICKEL PLATING.
   0.762μm [30μ"] MIN. Cu UNDER PLATING OVERALL.
   GROUNDING STRIP: SPUTTERING/BLACK PLATING IN FRONT SURFACE.
4. REFLOW SOLDER CAPABLE TO 260°C PER TE SPEC 109-201, CONDITION B.

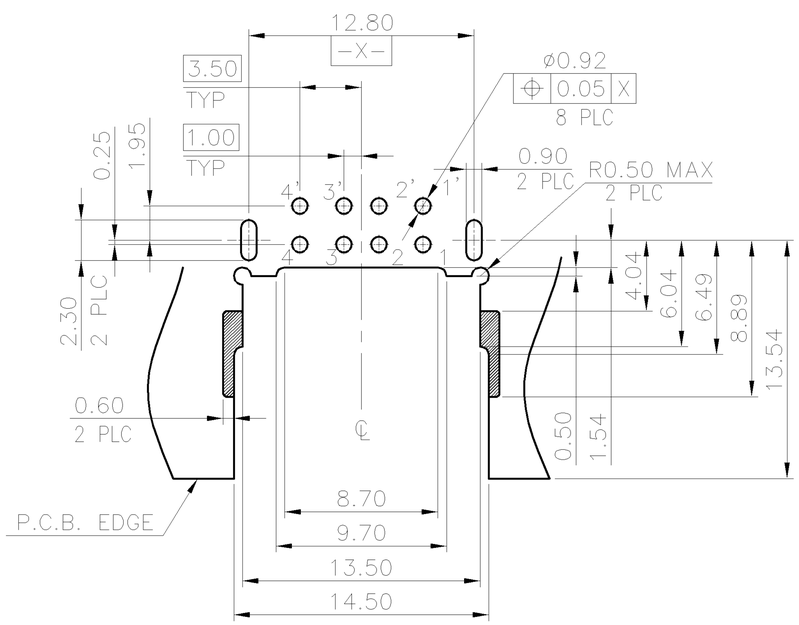

RECOMMEND P.C.B LAYOUT (THICKNESS 1.4~1.6mm)
(COMPONENT SIDE) TOLERANCE±0.05mm

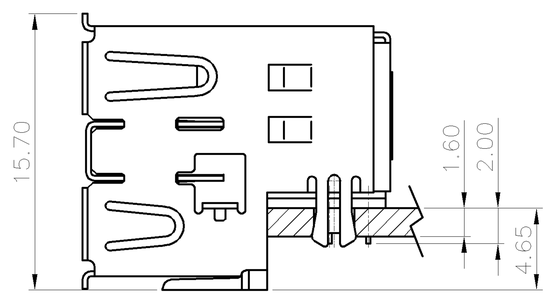

RECOMMENDED MOUNT DIMENSION

3	TAPE & REEL	3-1734062-4
2	TAPE & REEL	3-1734062-3
	TUBE	3-1734062-2
	TRAY	3-1734062-1
FINISH	PACKAGE	PART NUMBER

THIS DRAWING IS A CONTROLLED DOCUMENT.

DIMENSIONS: MM

TOLERANCES UNLESS OTHERWISE SPECIFIED:

0 PLC	± -
1 PLC	± 0.35
2 PLC	± 0.25
3 PLC	± -
4 PLC	± -
ANGLES	± 3°

MATERIAL: SEE NOTE

FINISH: SEE NOTE

DWN
CHK
APVD
PRODUCT SPEC
QUALIFICATION TEST REPORT
WEIGHT 4.71 GRAMS

TE Connectivity

NAME: USB CONNECTOR, A SERIES, STACKED, OFFSET TYPE

SIZE	CAGE CODE	DRAWING NO	RESTRICTED TO
A3	00779	C-1734062	—

CUSTOMER DRAWING | SCALE — | SHEET 4 OF 24 | REV G

THIS DRAWING IS UNPUBLISHED. RELEASED FOR PUBLICATION -,- .
© COPYRIGHT - BY TYCO ELECTRONICS CORPORATION. ALL RIGHTS RESERVED.

LOC	DIST
DW	—

REVISIONS

P	LTR	DESCRIPTION	DATE	DWN	APVD
		SEE SHEET 1.			

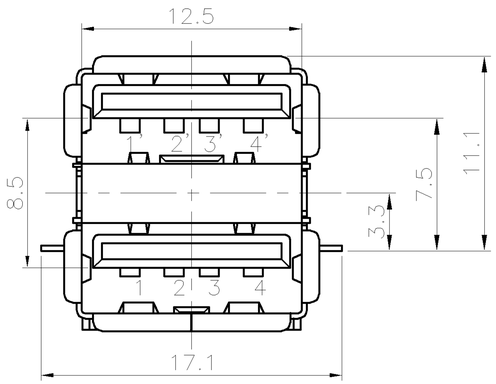

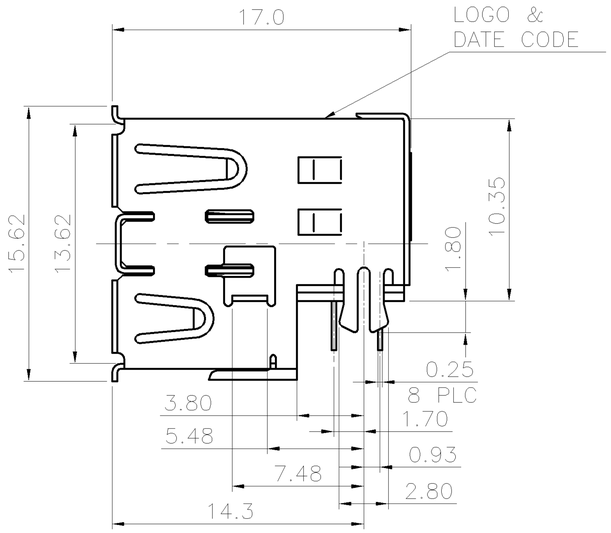

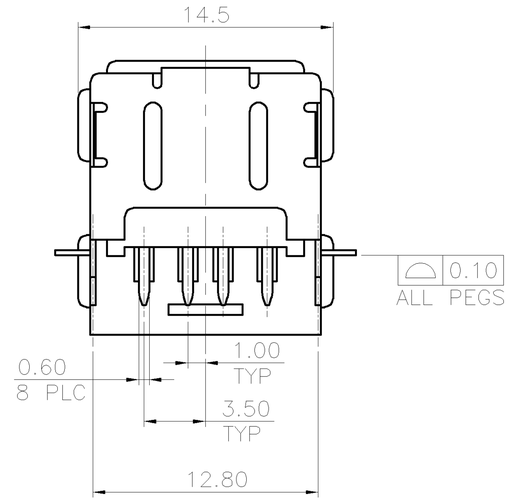

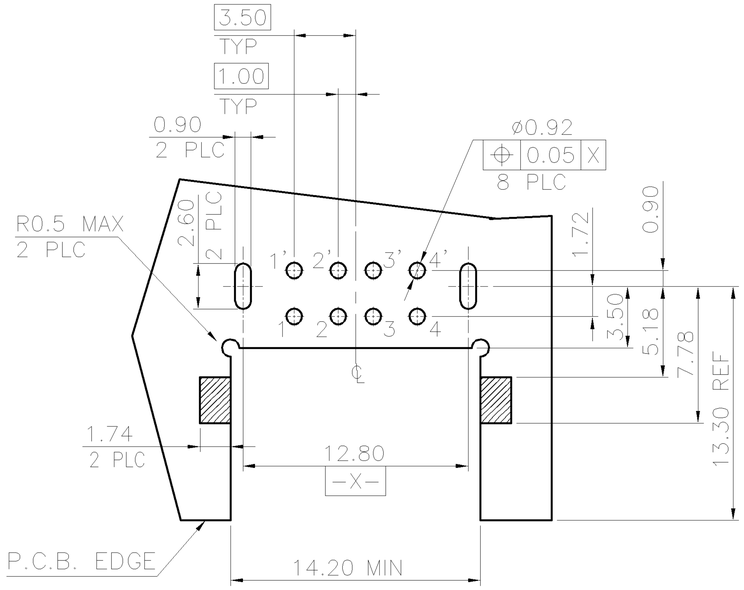

RECOMMEND P.C.B LAYOUT (THICKNESS 1.0~1.4mm)
(COMPONENT SIDE) TOLERANCE±0.05mm

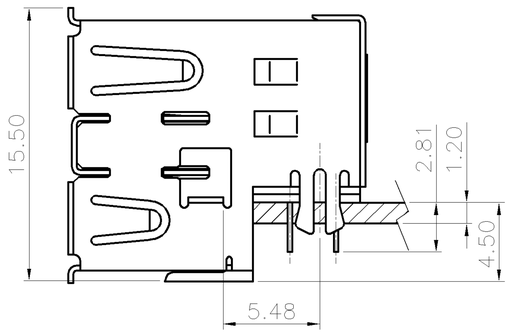

RECOMMENDED MOUNT DIMENSION

NOTES:
1. MATERIAL:
   HOUSING: PA9T WITH 30% GF, UL 94V-0 RATED, BLACK COLOR.
   SPACER: PA9T WITH 30% GF, UL 94V-0 RATED, BLACK COLOR.
   CONTACT: PHOSPHOR BRONZE.
   FRONT SHIELD: BRASS.
   REAR SHIELD: SPCC.
   GROUNDING STRIP: BRASS.
2. FINISH:
   CONTACT: 0.762μm [30μ"] MIN. GOLD PLATING ON CONTACT AREA.
   3.048μm [120μ"] MIN. BRIGHT TIN PLATING ON SOLDERTAILS.
   WITH ENTIREC CONTACT UNDERPLATED 1.27μm [50μ"] MIN. NICKEL.
   FRONT SHIELD: 0.762μm [30μ"] MIN. NICKEL PLATING.
   0.762μm [30μ"] MIN. Cu UNDER PLATING OVERALL.
   REAR SHIELD: 0.762μm [30μ"] MIN. NICKEL PLATING.
   0.762μm [30μ"] MIN. Cu UNDER PLATING OVERALL.
   GROUNDING STRIP: 0.762μm [30μ"] MIN. NICKEL PLATING.
   0.762μm [30μ"] MIN. Cu UNDER PLATING OVERALL.
3. REFLOW SOLDER CAPABLE TO 260°C PER TE SPEC 109-201, CONDITION B.

TUBE	4-1734062-1
PACKAGE	PART NUMBER

THIS DRAWING IS A CONTROLLED DOCUMENT.

DIMENSIONS: MM

TOLERANCES UNLESS OTHERWISE SPECIFIED:

0 PLC	± -
1 PLC	± 0.35
2 PLC	± 0.25
3 PLC	± -
4 PLC	± -
ANGLES	± 3°

MATERIAL: SEE NOTE

FINISH: SEE NOTE

DWN
CHK
APVD
PRODUCT SPEC
QUALIFICATION TEST REPORT
WEIGHT 4.71 GRAMS

TE Connectivity

NAME: USB CONNECTOR, A SERIES, STACKED, OFFSET TYPE

SIZE	CAGE CODE	DRAWING NO	RESTRICTED TO
A3	00779	C-1734062	—

CUSTOMER DRAWING | SCALE — | SHEET 5 OF 24 | REV G

THIS DRAWING IS UNPUBLISHED. RELEASED FOR PUBLICATION -,- .
© COPYRIGHT - BY TYCO ELECTRONICS CORPORATION. ALL RIGHTS RESERVED.

LOC	DIST
DW	—

REVISIONS

P	LTR	DESCRIPTION	DATE	DWN	APVD
		SEE SHEET 1.			

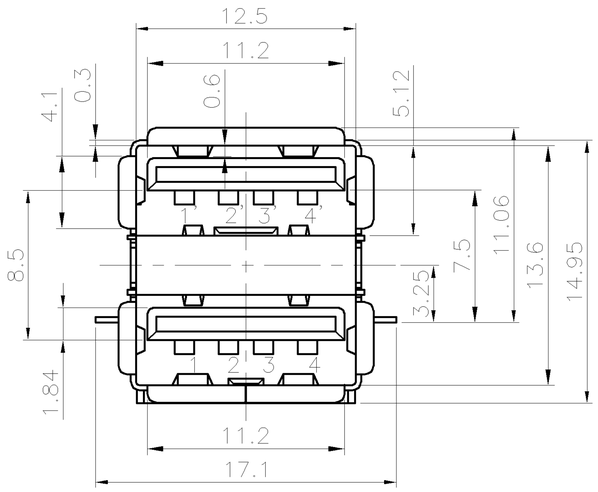

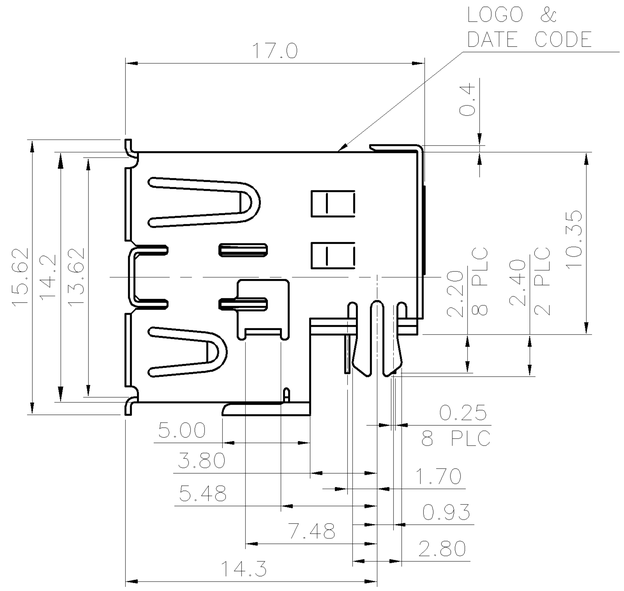

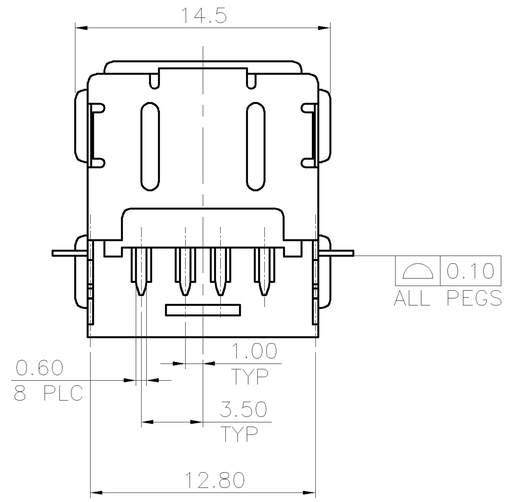

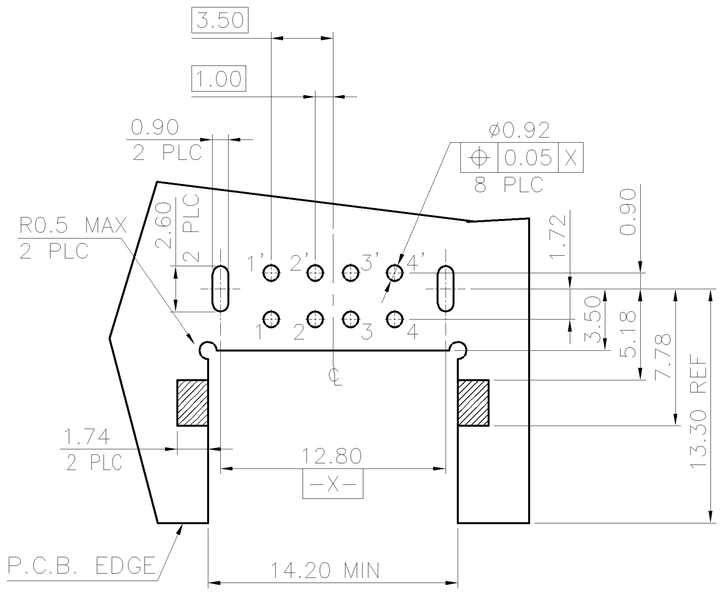

RECOMMEND P.C.B LAYOUT (THICKNESS 1.6mm)
(COMPONENT SIDE) TOLERANCE±0.05mm

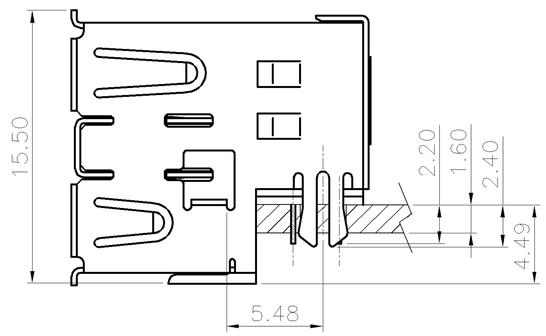

RECOMMENDED MOUNT DIMENSION

NOTES:
1. MATERIAL:
   HOUSING: PA9T WITH 30% GF, UL 94V-0 RATED, BLACK COLOR.
   SPACER: PA9T WITH 30% GF, UL 94V-0 RATED, BLACK COLOR.
   CONTACT: PHOSPHOR BRONZE.
   FRONT SHIELD: SUS.
   REAR SHIELD: SPCC.
   GROUNDING STRIP: SUS.
2. FINISH:
   CONTACT: 0.762μm [30μ"] MIN. GOLD PLATING ON CONTACT AREA.
   3.048μm [120μ"] MIN. BRIGHT TIN PLATING ON SOLDERTAILS.
   WITH ENTIREC CONTACT UNDERPLATED 1.27μm [50μ"] MIN. NICKEL.
   FRONT SHIELD: 0.762μm [30μ"] MIN. NICKEL PLATING OVERALL.
   REAR SHIELD: 0.762μm [30μ"] MIN. NICKEL PLATING.
   0.762μm [30μ"] MIN. Cu UNDER PLATING OVERALL.
3. REFLOW SOLDER CAPABLE TO 260°C PER TE SPEC 109-201, CONDITION B.

TAPE & REEL	4-1734062-2
PACKAGE	PART NUMBER

THIS DRAWING IS A CONTROLLED DOCUMENT.

DIMENSIONS: MM

TOLERANCES UNLESS OTHERWISE SPECIFIED:

0 PLC	± -
1 PLC	± 0.35
2 PLC	± 0.25
3 PLC	± -
4 PLC	± -
ANGLES	± 3°

MATERIAL: SEE NOTE

FINISH: SEE NOTE

DWN
CHK
APVD
PRODUCT SPEC
QUALIFICATION TEST REPORT
WEIGHT 4.71 GRAMS

TE Connectivity

NAME: USB CONNECTOR, A SERIES, STACKED, OFFSET TYPE

SIZE	CAGE CODE	DRAWING NO	RESTRICTED TO
A3	00779	C-1734062	—

CUSTOMER DRAWING | SCALE — | SHEET 6 OF 24 | REV G

THIS DRAWING IS UNPUBLISHED. RELEASED FOR PUBLICATION -,- .
© COPYRIGHT - BY TYCO ELECTRONICS CORPORATION. ALL RIGHTS RESERVED.

LOC	DIST
DW	—

REVISIONS

P	LTR	DESCRIPTION	DATE	DWN	APVD
		SEE SHEET 1.			

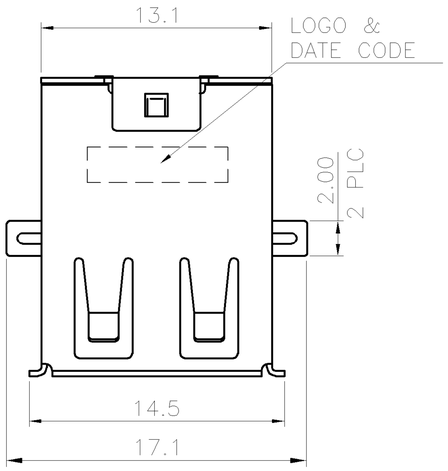

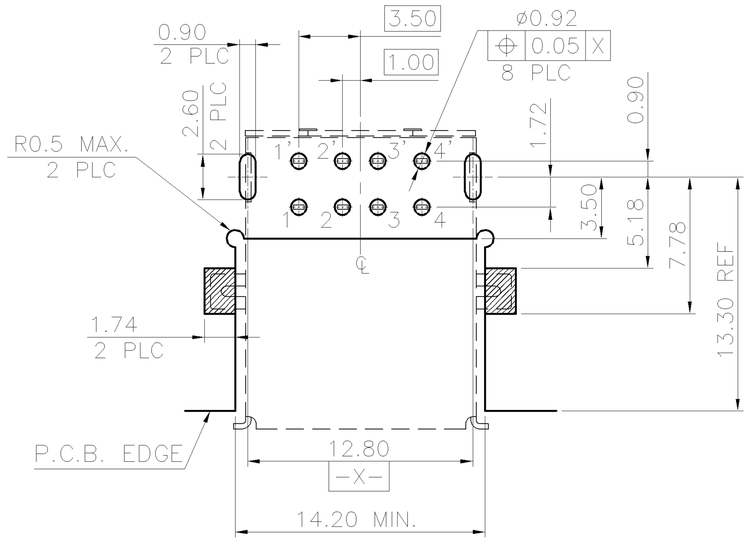

RECOMMEND P.C.B LAYOUT (THICKNESS 1.6mm)
(COMPONENT SIDE) TOLERANCE±0.05mm

NOTES:
1. MATERIAL:
   HOUSING: PA9T WITH 30% GF, UL 94V-0 RATED, BLACK COLOR.
   SPACER: PA9T WITH 30% GF, UL 94V-0 RATED, BLACK COLOR.
   CONTACT: PHOSPHOR BRONZE.
   FRONT SHIELD: SUS.
   REAR SHIELD: SPCC.
   GROUNDING STRIP: SUS.
2. FINISH:
   CONTACT: 0.762μm [30μ"] MIN. GOLD PLATING ON CONTACT AREA,
   2.540μm [100μ"] MIN. BRIGHT TIN PLATING ON SOLDERTAILS,
   WITH ENTIREC CONTACT UNDERPLATED 1.27μm [50μ"] MIN. NICKEL.
   FRONT SHIELD: 0.762μm [30μ"] MIN. NICKEL PLATING OVERALL.
   REAR SHIELD: 0.762μm [30μ"] MIN. NICKEL PLATING,
   0.762μm [30μ"] MIN. Cu UNDER PLATING OVERALL.
3. REFLOW SOLDER CAPABLE TO 260°C PER TE SPEC 109-201, CONDITION B.

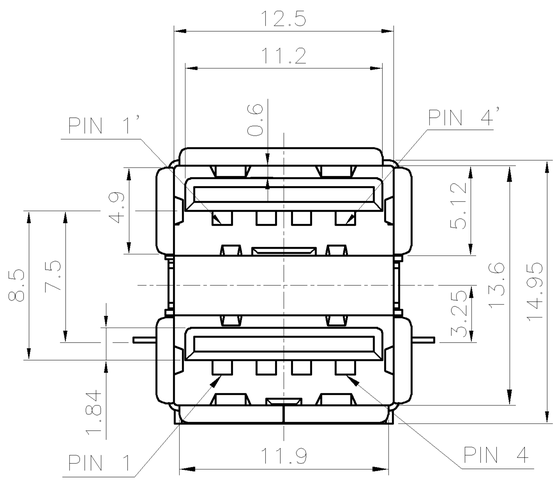

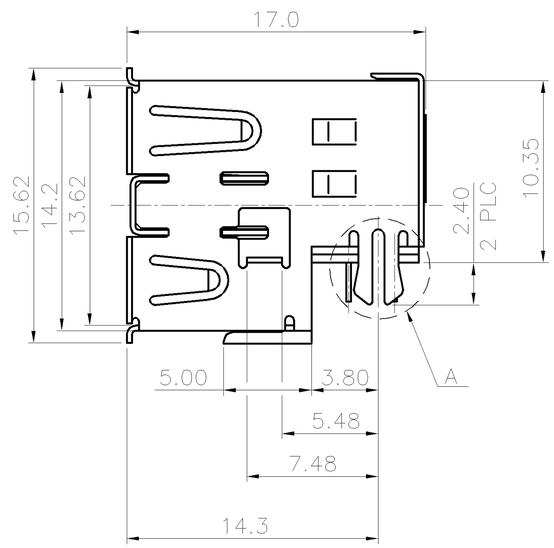

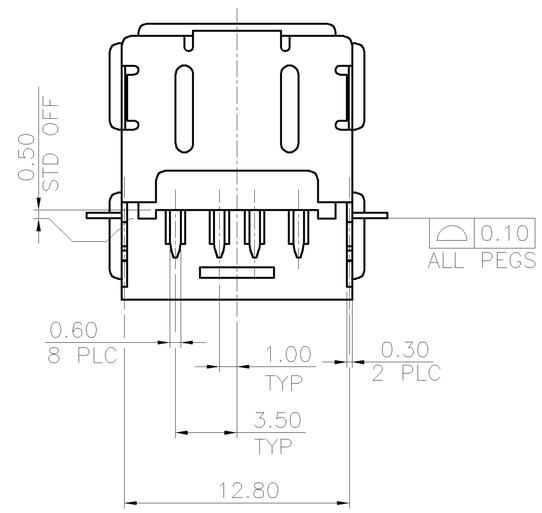

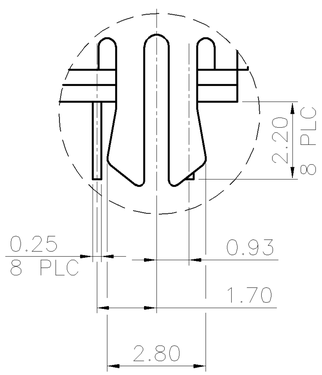

DETAIL A
SCALE 2:1

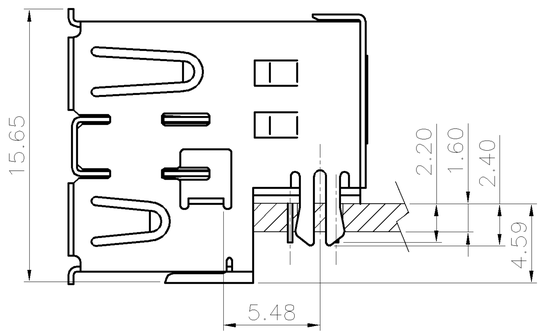

RECOMMENDED MOUNT DIMENSION

TAPE & REEL	4-1734062-3
PACKAGE	PART NUMBER

THIS DRAWING IS A CONTROLLED DOCUMENT.

DIMENSIONS: MM

TOLERANCES UNLESS OTHERWISE SPECIFIED:

0 PLC	± -
1 PLC	± 0.35
2 PLC	± 0.25
3 PLC	± -
4 PLC	± -
ANGLES	± 3°

MATERIAL: SEE NOTE

FINISH: SEE NOTE

DWN
CHK
APVD
PRODUCT SPEC
QUALIFICATION TEST REPORT
WEIGHT 4.25 GRAMS

TE Connectivity

NAME: USB CONNECTOR, A SERIES, STACKED, OFFSET TYPE

SIZE	CAGE CODE	DRAWING NO	RESTRICTED TO
A3	00779	C-1734062	—

CUSTOMER DRAWING | SCALE — | SHEET 7 OF 24 | REV G

THIS DRAWING IS UNPUBLISHED. RELEASED FOR PUBLICATION -,- .
© COPYRIGHT - BY TYCO ELECTRONICS CORPORATION. ALL RIGHTS RESERVED.

LOC	DIST
DW	—

REVISIONS

P	LTR	DESCRIPTION	DATE	DWN	APVD
		SEE SHEET 1.			

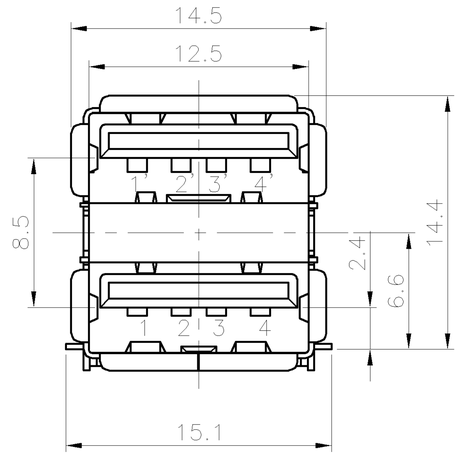

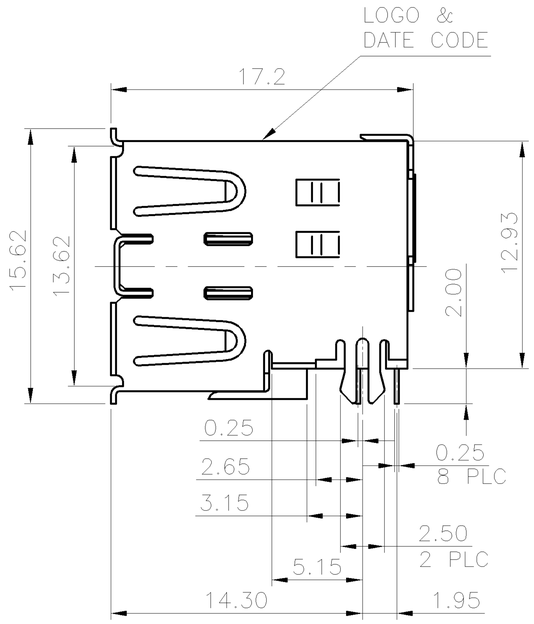

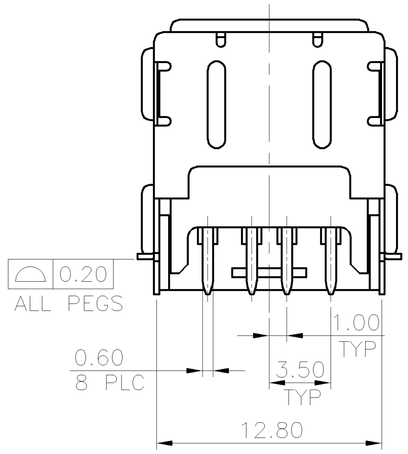

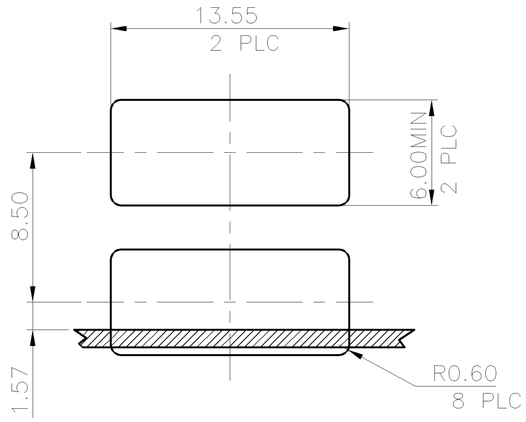

MOUNTING PANEL CUTOUT
(INTERNAL SIDE)

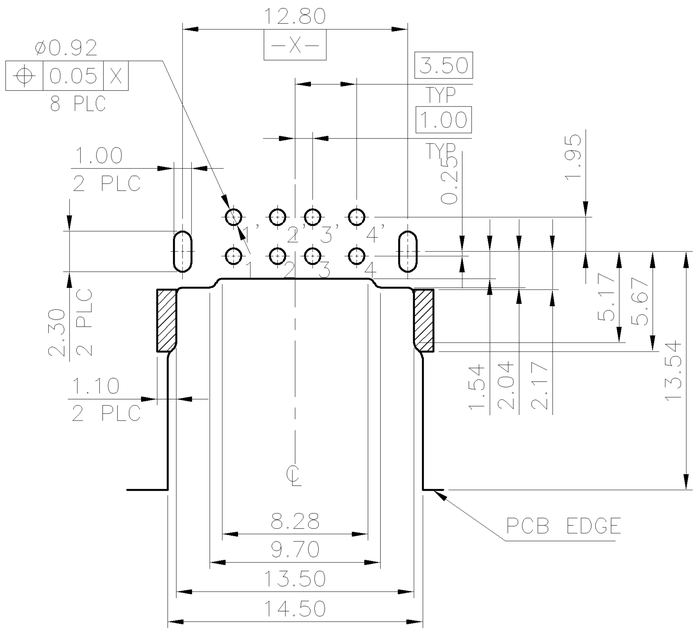

RECOMMEND P.C.B LAYOUT (THICKNESS 1.0mm)
(COMPONENT SIDE) TOLERANCE±0.05mm

NOTES:
1. MATERIAL:
   HOUSING: PA9T WITH 30% GF, UL 94V-0 RATED, BLACK COLOR.
   SPACER: PA9T WITH 30% GF, UL 94V-0 RATED, BLACK COLOR.
   CONTACT: PHOSPHOR BRONZE.
   FRONT SHIELD: BRASS.
   REAR SHIELD: SPCC.
   GROUNDING STRIP: BRASS.
2. FINISH :
   CONTACT: 0.762μm [30μ"] MIN. GOLD PLATING ON CONTACT AREA.
   3.048μm [120μ"] MIN. BRIGHT-TIN PLATING ON SOLDERTAILS.
   WITH ENTIREC CONTACT UNDERPLATED 1.27mμ" [50μ"] MIN. NICKEL.
   FRONT SHIELD: 0.762μm [30μ"] MIN. NICKEL PLATING.
   0.762μm [30μ"] MIN. Cu UNDER PLATING OVERALL.
   REAR SHIELD: 0.762μm [30μ"] MIN. NICKEL PLATING.
   0.762μm [30μ"] MIN. Cu UNDER PLATING OVERALL.
   GROUNDING STRIP: 0.762μm [30μ"] MIN. NICKEL PLATING.
   0.762μm [30μ"] MIN. Cu UNDER PLATING OVERALL.
3. REFLOW SOLDER CAPABLE TO 260°C PER TE SPEC 109-201, CONDITION B.

PACKAGE	PART NUMBER
OBSOLETE TRAY	5-1734062-2
OBSOLETE TAPE & REEL	5-1734062-1

THIS DRAWING IS A CONTROLLED DOCUMENT.

DIMENSIONS: MM

TOLERANCES UNLESS OTHERWISE SPECIFIED:

0 PLC	± -
1 PLC	± 0.35
2 PLC	± 0.25
3 PLC	± -
4 PLC	± -
ANGLES	± 3°

MATERIAL: SEE NOTE

FINISH: SEE NOTE

DWN
CHK
APVD
PRODUCT SPEC
QUALIFICATION TEST REPORT
WEIGHT 4.71 GRAMS

TE Connectivity

NAME: USB CONNECTOR, A SERIES, STACKED, OFFSET TYPE

SIZE	CAGE CODE	DRAWING NO	RESTRICTED TO
A3	00779	C-1734062	—

CUSTOMER DRAWING | SCALE — | SHEET 8 OF 24 | REV G

THIS DRAWING IS UNPUBLISHED. RELEASED FOR PUBLICATION -,- .
© COPYRIGHT - BY TYCO ELECTRONICS CORPORATION. ALL RIGHTS RESERVED.

LOC	DIST
DW	—

REVISIONS

P	LTR	DESCRIPTION	DATE	DWN	APVD
		SEE SHEET 1.			

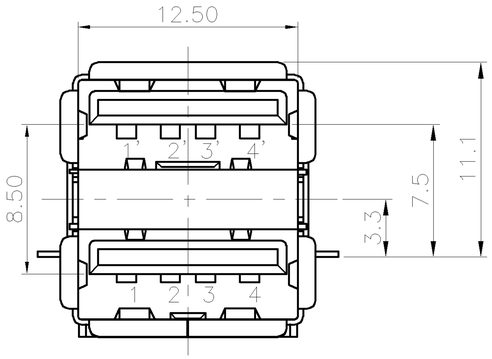

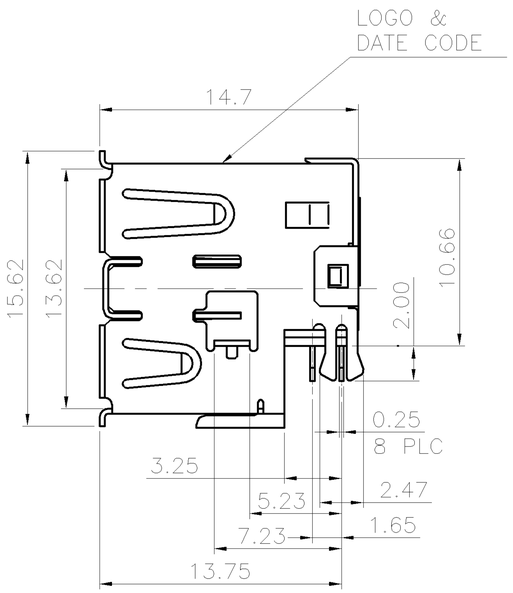

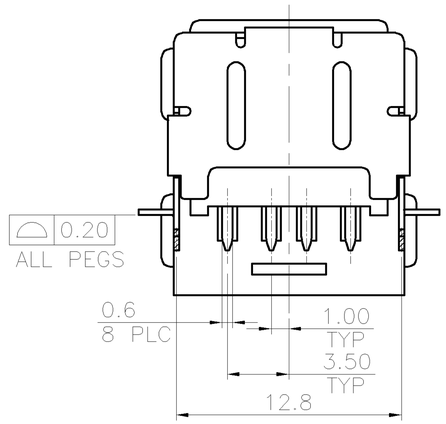

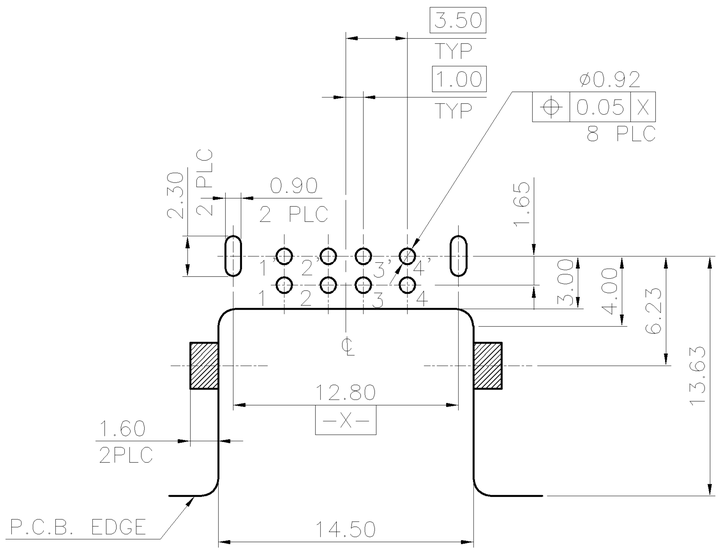

RECOMMEND P.C.B LAYOUT (THICKNESS 1.2mm)
(COMPONENT SIDE) TOLERANCE±0.05mm

NOTES:
1.MATERIAL:
HOUSING: PA9T WITH 30% GF, UL 94V-0 RATED, BLACK COLOR.
SPACER: PA9T WITH 30% GF, UL 94V-0 RATED, BLACK COLOR.
CONTACT: PHOSPHOR BRONZE.
FRONT SHELL: BRASS.
REAR SHELL: SPCC.
GROUNDING STRIP: STAINLESS.
2.FINISH:
CONTACT: 0.762μm [30μ"] MIN. GOLD PLATING ON CONTACT AREA.
3.048μm [120μ"] MIN. BRIGHT TIN PLATING ON SOLDER TAILS,
WITH ENTIREC CONTACT UNDERPLATED 1.27μm [50μ"] MIN. NICKEL.
FRONT SHELL: 0.762μm [30μ"] MIN. NICKEL PLATED.
0.762μm [30μ"] MIN. Cu UNDERPLATING OVERALL.
REAR SHELL: 0.762μm [30μ"] MIN. NICKEL PLATED.
0.762μm [30μ"] MIN. Cu UNDERPLATING OVERALL.
GROUNDING SHELL: 0.762μm [30μ"] MIN. NICKEL PLATED.
0.762μm [30μ"] MIN. Cu UNDERPLATING OVERALL.
3. REFLOW SOLDER CAPABLE TO 260°C PER TE
SPEC 109-201, CONDITION B.

TAPE & REEL	6-1734062-1
PACKAGE	PART NUMBER

THIS DRAWING IS A CONTROLLED DOCUMENT.

DIMENSIONS: MM

TOLERANCES UNLESS OTHERWISE SPECIFIED:

0 PLC	± -
1 PLC	± 0.35
2 PLC	± 0.25
3 PLC	± -
4 PLC	± -
ANGLES	± 3°

MATERIAL: SEE NOTE
FINISH: SEE NOTE

DWN
CHK
APVD
PRODUCT SPEC
QUALIFICATION TEST REPORT
WEIGHT 4.71 GRAMS
CUSTOMER DRAWING

TE Connectivity

NAME: USB CONNECTOR, A SERIES, STACKED, OFFSET TYPE

SIZE	CAGE CODE	DRAWING NO	RESTRICTED TO
A3	00779	C-1734062	—

SCALE —
SHEET 9 OF 24
REV G

THIS DRAWING IS UNPUBLISHED. RELEASED FOR PUBLICATION -,- .
© COPYRIGHT - BY TYCO ELECTRONICS CORPORATION. ALL RIGHTS RESERVED.

LOC	DIST
DW	—

REVISIONS

P	LTR	DESCRIPTION	DATE	DWN	APVD
		SEE SHEET 1.			

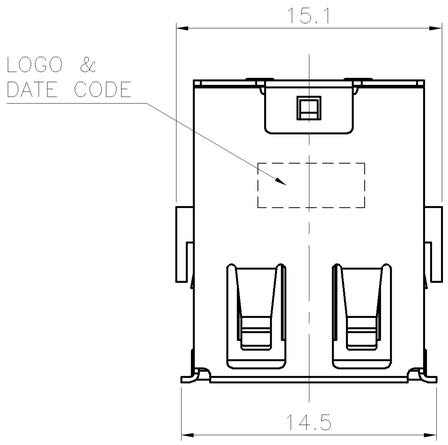

NOTES:
1. MATERIAL:
   HOUSING: PA9T WITH 30% GF, UL 94V-0 RATED, BLACK COLOR.
   CONTACT: PHOSPHOR BRONZE.
   FRONT SHIELD: BRASS.
   REAR SHIELD: SPCC.
   GROUNDING STRIP: BRASS.
2. FINISH:
   CONTACT: 0.762μm [30μ"] MIN. GOLD PLATING ON CONTACT AREA.
   3.048μm [120μ"] MIN. BRIGHT TIN PLATING ON SOLDERTAILS.
   WITH ENTIREC CONTACT UNDERPLATED 1.27μm [50μ"] MIN. NICKEL.
   FRONT SHELL: 0.762μm [30μ"] MIN. NICKEL PLATED.
   0.762μm [30μ"] MIN. Cu UNDERPLATING OVERALL.
   REAR SHELL: 0.762μm [30μ"] MIN. NICKEL PLATED.
   0.762μm [30μ"] MIN. Cu UNDERPLATING OVERALL.
   GROUNDING STRIP: 0.762μm [30μ"] MIN. NICKEL PLATING.
   0.762μm [30μ"] MIN. Cu UNDER PLATING OVERALL.
3. REFLOW SOLDER CAPABLE TO 260°C PER TE
   SPEC 109-201, CONDITION B.

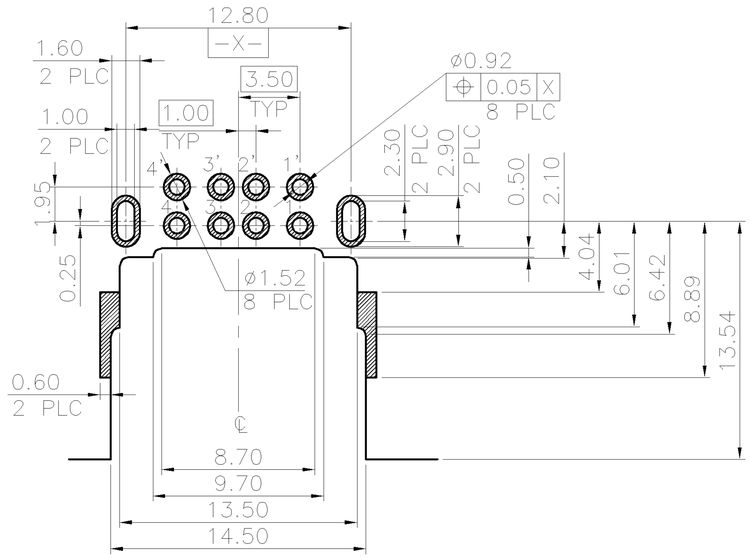

RECOMMEND P.C.B LAYOUT (THICKNESS 1.2mm)
(COMPONENT SIDE) TOLERANCE±0.05mm

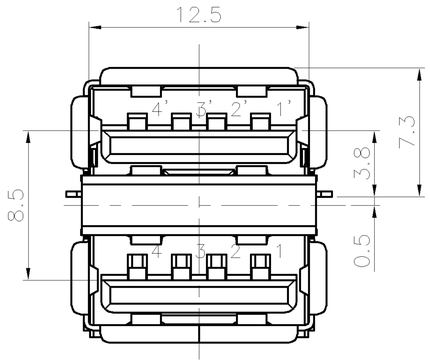

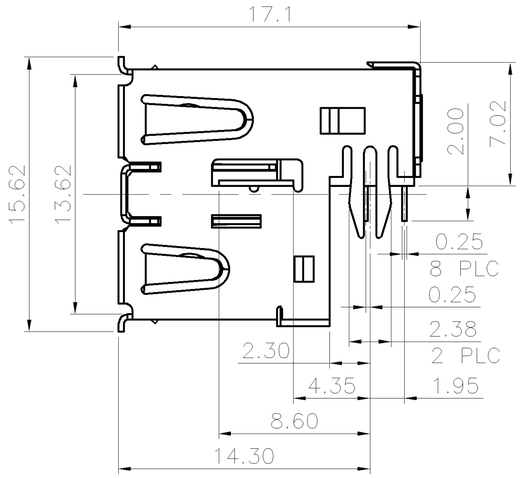

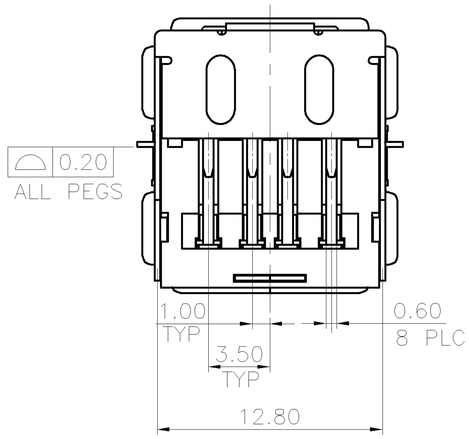

TAPE & REEL	7-1734062-1
PACKAGE	PART NUMBER

THIS DRAWING IS A CONTROLLED DOCUMENT.

DIMENSIONS: MM

TOLERANCES UNLESS OTHERWISE SPECIFIED:

0 PLC	± -
1 PLC	± 0.35
2 PLC	± 0.25
3 PLC	± -
4 PLC	± -
ANGLES	± 3°

MATERIAL: SEE NOTE

FINISH: SEE NOTE

DWN
CHK
APVD
PRODUCT SPEC
QUALIFICATION TEST REPORT
WEIGHT 4.3 GRAMS

TE Connectivity

NAME: USB CONNECTOR, A SERIES, STACKED, OFFSET TYPE

SIZE	CAGE CODE	DRAWING NO	RESTRICTED TO
A3	00779	C-1734062	—

CUSTOMER DRAWING | SCALE — | SHEET 10 OF 24 | REV G

THIS DRAWING IS UNPUBLISHED. RELEASED FOR PUBLICATION -,- .
© COPYRIGHT - BY TYCO ELECTRONICS CORPORATION. ALL RIGHTS RESERVED.

LOC	DIST
DW	—

REVISIONS

P	LTR	DESCRIPTION	DATE	DWN	APVD
		SEE SHEET 1.			

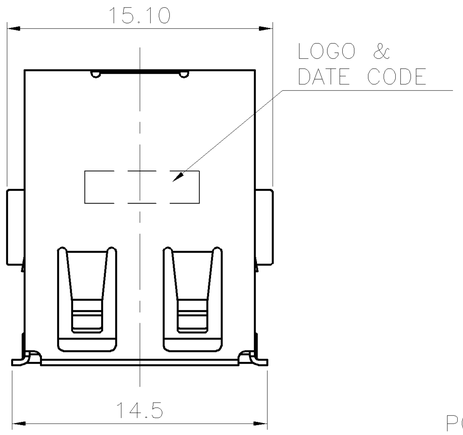

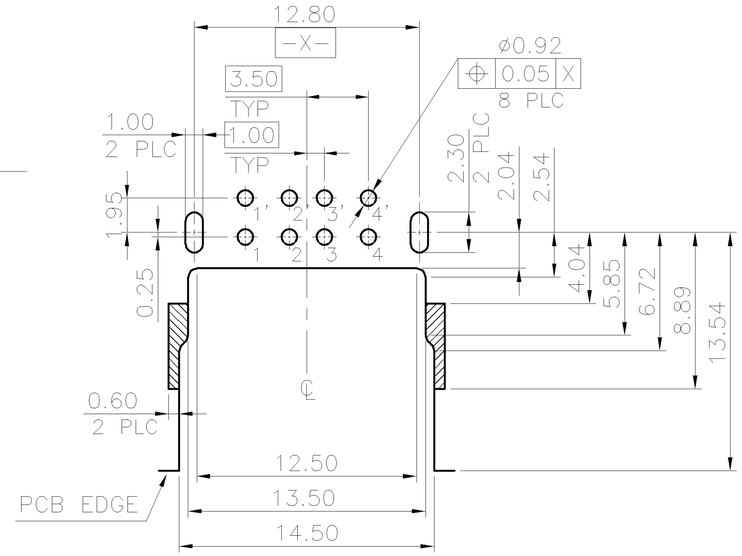

RECOMMEND P.C.B LAYOUT (THICKNESS 1.2mm)
(COMPONENT SIDE) TOLERANCE±0.05mm

NOTE:
1. MATERIAL:
   HOUSING: PA9T WITH 30% GF, UL 94V-0 RATED, BLACK COLOR.
   SPACER: PA9T WITH 30% GF, UL 94V-0 RATED, BLACK COLOR.
   CONTACT: PHOSPHOR BRONZE.
   FRONT SHIELD: BRASS.
   GROUNDING STRIP: BRASS.
2. FINISH:
   CONTACT: 0.762μm [30μ"] MIN. GOLD PLATING ON CONTACT AREA.
   3.048μm [120μ"] MIN. BRIGHT TIN PLATING ON SOLDER TAIL, WITH ENTIREC CONTACT UNDERPLATED 1.27μm [50μ"] MIN. NICKEL.
   FRONT SHELL: 0.762μm [30μ"] MIN. NICKEL PLATED.
   0.762μm [30μ"] MIN. Cu UNDERPLATING OVERALL.
   GROUNDING STRIP: 0.762μm [30μ"] MIN. NICKEL PLATING.
   0.762μm [30μ"] MIN. Cu UNDER PLATING OVERALL.
3. REFLOW SOLDER CAPABLE TO 260°C PER TE SPEC 109-201, CONDITION B.

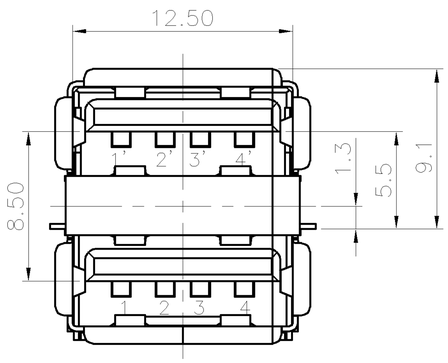

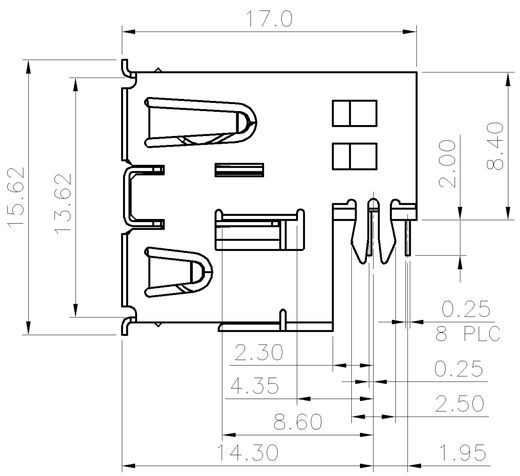

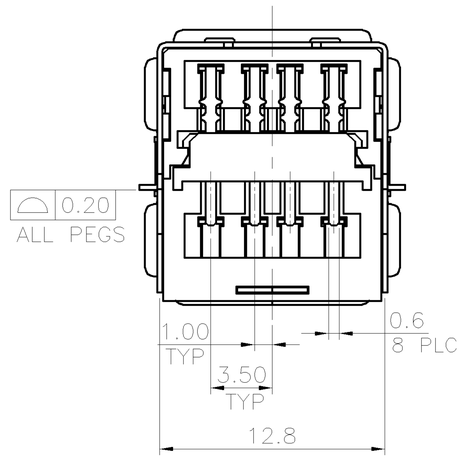

TAPE & REEL	8-1734062-1
PACKAGE	PART NUMBER

THIS DRAWING IS A CONTROLLED DOCUMENT.

DIMENSIONS: MM

TOLERANCES UNLESS OTHERWISE SPECIFIED:

0 PLC	± -
1 PLC	± 0.35
2 PLC	± 0.25
3 PLC	± -
4 PLC	± -
ANGLES	± 3°

MATERIAL: SEE NOTE

FINISH: SEE NOTE

DWN / CHK / APVD

PRODUCT SPEC

QUALIFICATION TEST REPORT

WEIGHT: 4.3 GRAMS

CUSTOMER DRAWING

TE Connectivity

NAME: USB CONNECTOR, A SERIES, STACKED, OFFSET TYPE

SIZE	CAGE CODE	DRAWING NO	RESTRICTED TO
A3	00779	C-1734062	—

SCALE	SHEET	REV
—	11 OF 24	G

THIS DRAWING IS UNPUBLISHED. RELEASED FOR PUBLICATION -,- .
© COPYRIGHT - BY TYCO ELECTRONICS CORPORATION. ALL RIGHTS RESERVED.

LOC	DIST
DW	—

REVISIONS

P	LTR	DESCRIPTION	DATE	DWN	APVD
		SEE SHEET 1.			

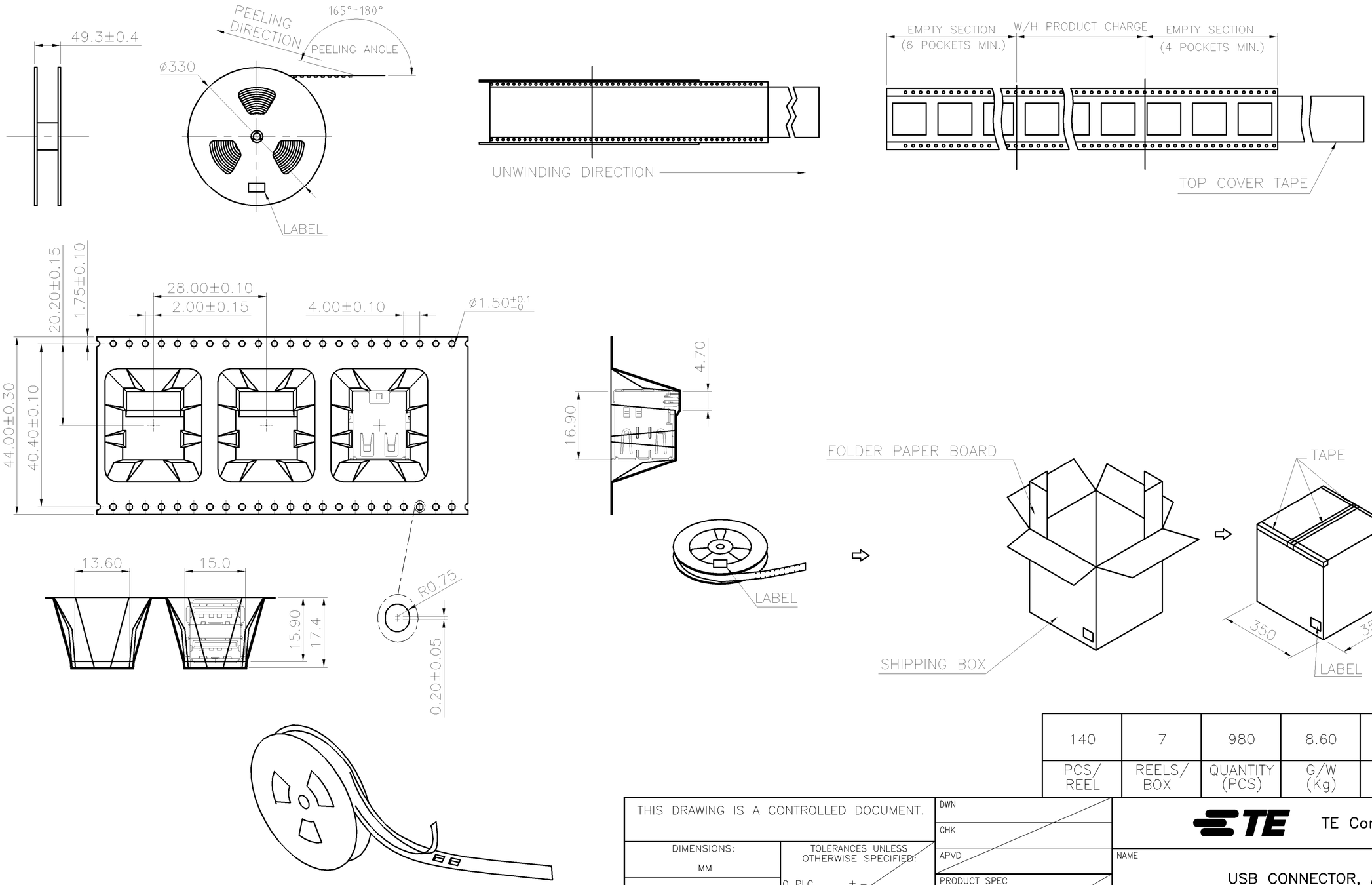

PCS/ REEL	REELS/ BOX	QUANTITY (PCS)	G/W (Kg)	N/W (Kg)	PART NUMBER
140	7	980	8.60	4.62	1-1734062-1
					1734062-1

THIS DRAWING IS A CONTROLLED DOCUMENT.

DIMENSIONS: MM

TOLERANCES UNLESS OTHERWISE SPECIFIED:
0 PLC ± -
1 PLC ± -
2 PLC ± -
3 PLC ± -
4 PLC ± -
ANGLES ± -

MATERIAL -

FINISH -

DWN
CHK
APVD
PRODUCT SPEC —
APPLICATION SPEC —
WEIGHT —

TE Connectivity

NAME
USB CONNECTOR, A SERIES, STACKED, OFFSET TYPE

SIZE	CAGE CODE	DRAWING NO	RESTRICTED TO
A3	00779	C-1734062	—

CUSTOMER DRAWING | SCALE — | SHEET 12 OF 24 | REV G

THIS DRAWING IS UNPUBLISHED. RELEASED FOR PUBLICATION – ,– .
© COPYRIGHT – BY TYCO ELECTRONICS CORPORATION. ALL RIGHTS RESERVED.

LOC	DIST
DW	—

REVISIONS

P	LTR	DESCRIPTION	DATE	DWN	APVD
		SEE SHEET 1.			

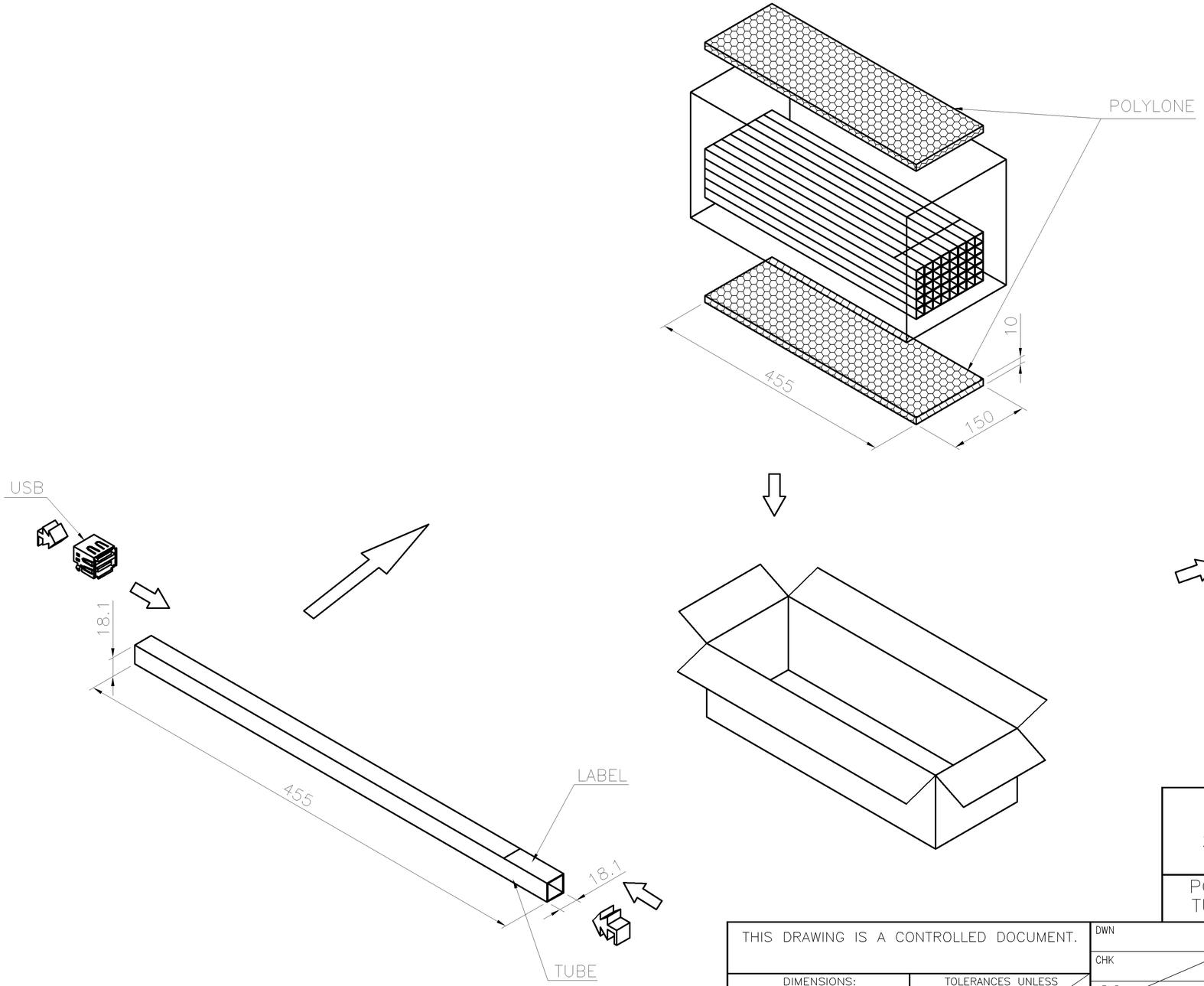

PCS/ TUBE	TUBS INNER BOX	QUANTITY (PCS)	G/W (Kg)	N/W (Kg)	PART NUMBER
24	40	960	6.10	4.52	3–1734062–2 1–1734062–2 1734062–2

THIS DRAWING IS A CONTROLLED DOCUMENT.

DIMENSIONS: MM

TOLERANCES UNLESS OTHERWISE SPECIFIED:
0 PLC ± –
1 PLC ± –
2 PLC ± –
3 PLC ± –
4 PLC ± –
ANGLES ± –

MATERIAL –

FINISH –

DWN
CHK
APVD
PRODUCT SPEC —
APPLICATION SPEC —
WEIGHT —

TE Connectivity

NAME
USB CONNECTOR, A SERIES, STACKED, OFFSET TYPE

SIZE	CAGE CODE	DRAWING NO	RESTRICTED TO
A3	00779	C–1734062	—

CUSTOMER DRAWING | SCALE — | SHEET 13 OF 24 | REV G

THIS DRAWING IS UNPUBLISHED. RELEASED FOR PUBLICATION -,- .
© COPYRIGHT - BY TYCO ELECTRONICS CORPORATION. ALL RIGHTS RESERVED.

LOC	DIST
DW	—

REVISIONS

P	LTR	DESCRIPTION	DATE	DWN	APVD
		SEE SHEET 1.			

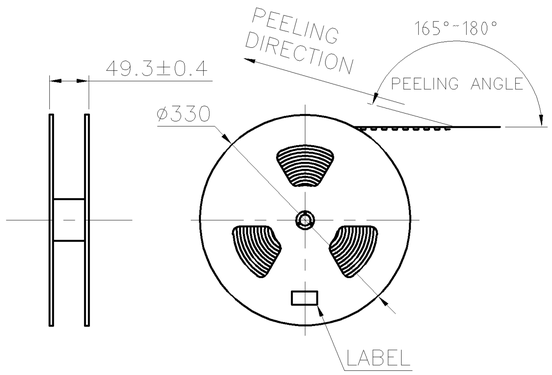

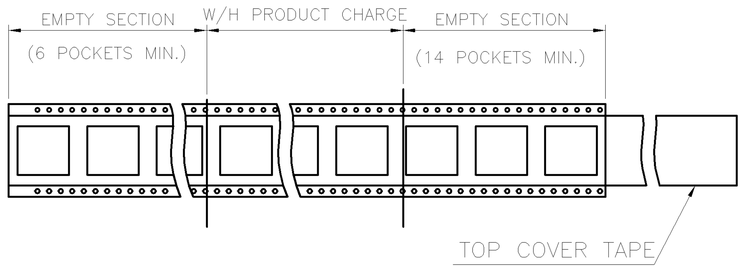

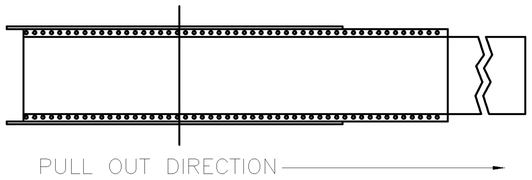

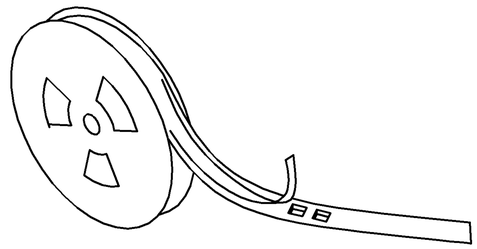

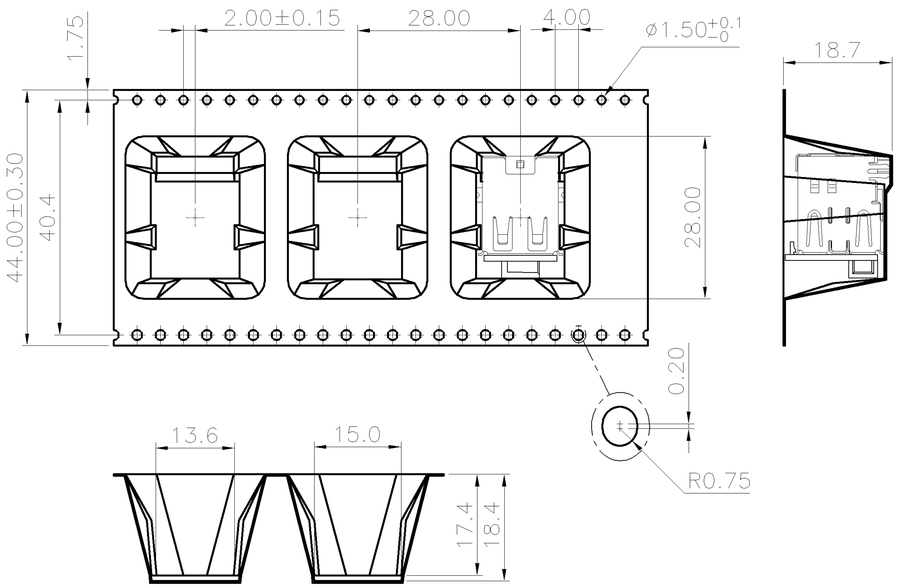

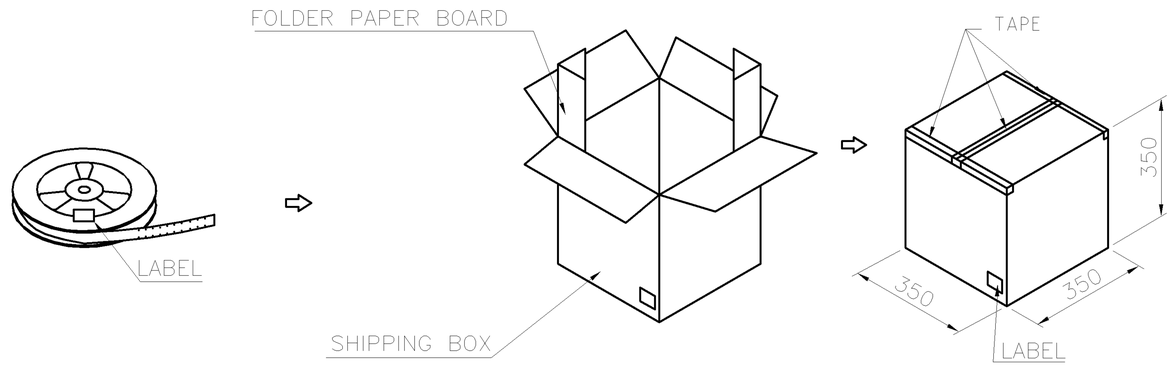

100	7	700	7.28	3.30	1734062-3
PCS/ REEL	REELS/ BOX	QUANTITY (PCS)	G/W (Kg)	N/W (Kg)	PART NUMBER

THIS DRAWING IS A CONTROLLED DOCUMENT.

DIMENSIONS: MM

TOLERANCES UNLESS OTHERWISE SPECIFIED:
0 PLC ± –
1 PLC ± –
2 PLC ± –
3 PLC ± –
4 PLC ± –
ANGLES ± –

MATERIAL –

FINISH –

DWN
CHK
APVD
PRODUCT SPEC —
APPLICATION SPEC —
WEIGHT —

TE Connectivity

NAME
USB CONNECTOR, A SERIES, STACKED, OFFSET TYPE

SIZE	CAGE CODE	DRAWING NO	RESTRICTED TO
A3	00779	C-1734062	—

CUSTOMER DRAWING | SCALE — | SHEET 14 OF 24 | REV G

THIS DRAWING IS UNPUBLISHED. RELEASED FOR PUBLICATION – ,– .
© COPYRIGHT – BY TYCO ELECTRONICS CORPORATION. ALL RIGHTS RESERVED.

LOC	DIST
DW	—

REVISIONS

P	LTR	DESCRIPTION	DATE	DWN	APVD
		SEE SHEET 1.			

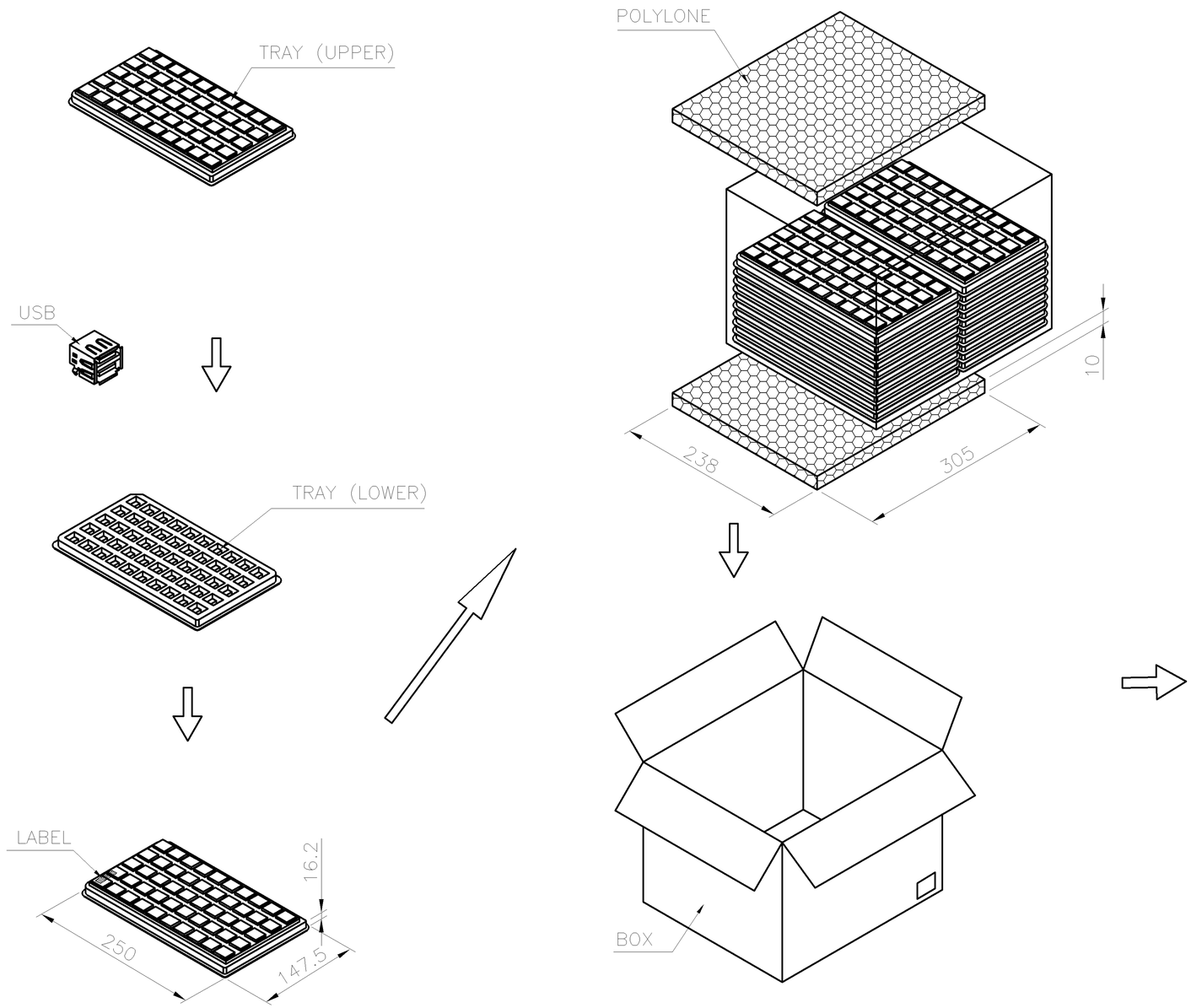

50	20	1000	6.82	4.71	2–1734062–2
PCS/ TRAY	TRAY/ BOX	QUANTITY (PCS)	G/W (Kg)	N/W (Kg)	PART NUMBER

THIS DRAWING IS A CONTROLLED DOCUMENT.

DIMENSIONS: MM

TOLERANCES UNLESS OTHERWISE SPECIFIED:
0 PLC ± –
1 PLC ± –
2 PLC ± –
3 PLC ± –
4 PLC ± –
ANGLES ± –

MATERIAL –

FINISH –

DWN
CHK
APVD
PRODUCT SPEC —
APPLICATION SPEC —
WEIGHT —

TE Connectivity

NAME
USB CONNECTOR, A SERIES, STACKED, OFFSET TYPE

SIZE	CAGE CODE	DRAWING NO	RESTRICTED TO
A3	00779	C–1734062	—

CUSTOMER DRAWING | SCALE — | SHEET 15 OF 24 | REV G

THIS DRAWING IS UNPUBLISHED. RELEASED FOR PUBLICATION – ,– .
© COPYRIGHT – BY TYCO ELECTRONICS CORPORATION. ALL RIGHTS RESERVED.

LOC	DIST
DW	—

REVISIONS

P	LTR	DESCRIPTION	DATE	DWN	APVD
		SEE SHEET 1.			

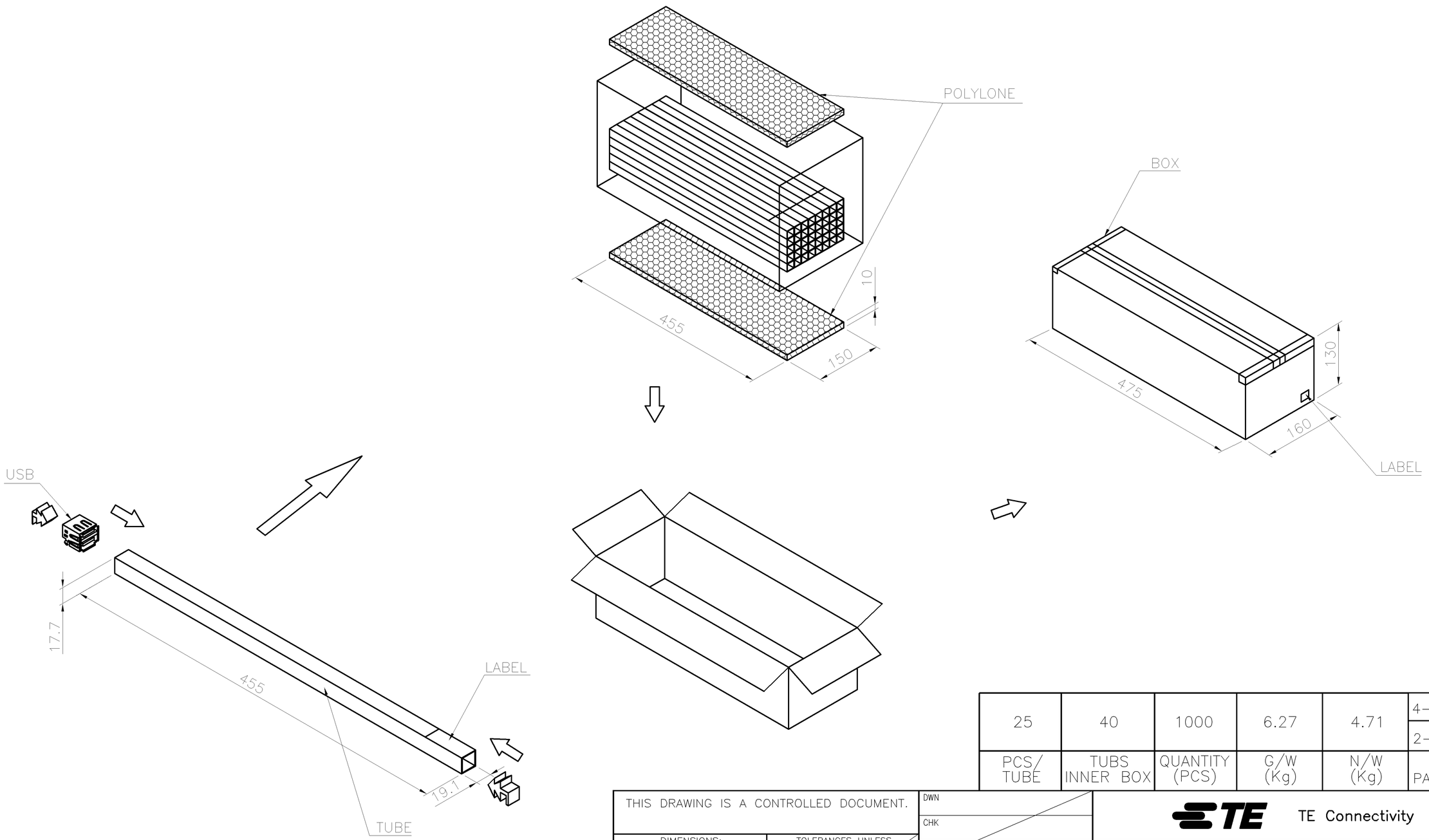

PCS/ TUBE	TUBS INNER BOX	QUANTITY (PCS)	G/W (Kg)	N/W (Kg)	PART NUMBER
25	40	1000	6.27	4.71	4–1734062–1 2–1734062–1

THIS DRAWING IS A CONTROLLED DOCUMENT.

DIMENSIONS: MM

TOLERANCES UNLESS OTHERWISE SPECIFIED:
0 PLC ± –
1 PLC ± –
2 PLC ± –
3 PLC ± –
4 PLC ± –
ANGLES ± –

MATERIAL –

FINISH –

DWN
CHK
APVD
PRODUCT SPEC —
APPLICATION SPEC —
WEIGHT —

TE Connectivity

NAME
USB CONNECTOR, A SERIES, STACKED, OFFSET TYPE

SIZE	CAGE CODE	DRAWING NO	RESTRICTED TO
A3	00779	C–1734062	—

CUSTOMER DRAWING | SCALE — | SHEET 16 OF 24 | REV G

THIS DRAWING IS UNPUBLISHED. RELEASED FOR PUBLICATION – –, .
© COPYRIGHT – BY TYCO ELECTRONICS CORPORATION. ALL RIGHTS RESERVED.

LOC	DIST
DW	—

REVISIONS

P	LTR	DESCRIPTION	DATE	DWN	APVD
		SEE SHEET 1.			

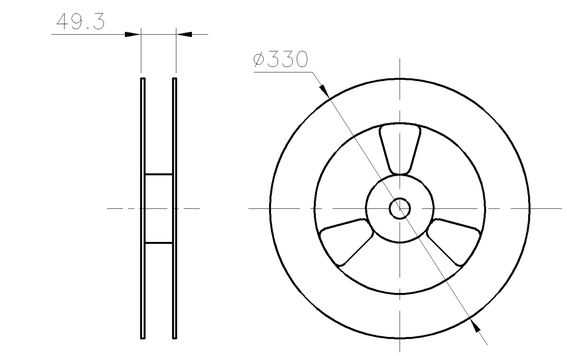

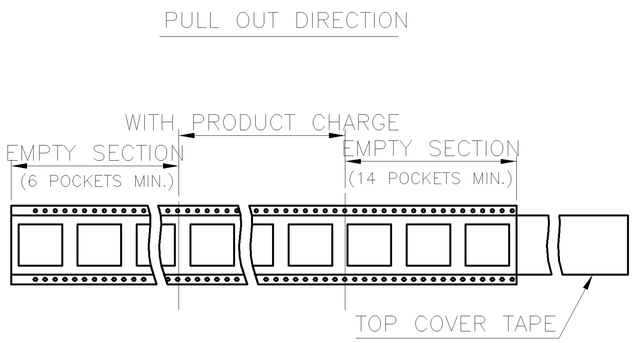

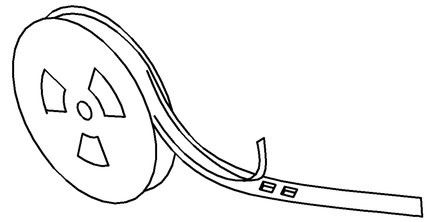

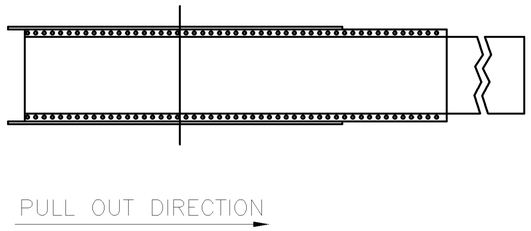

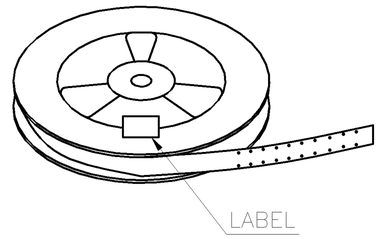

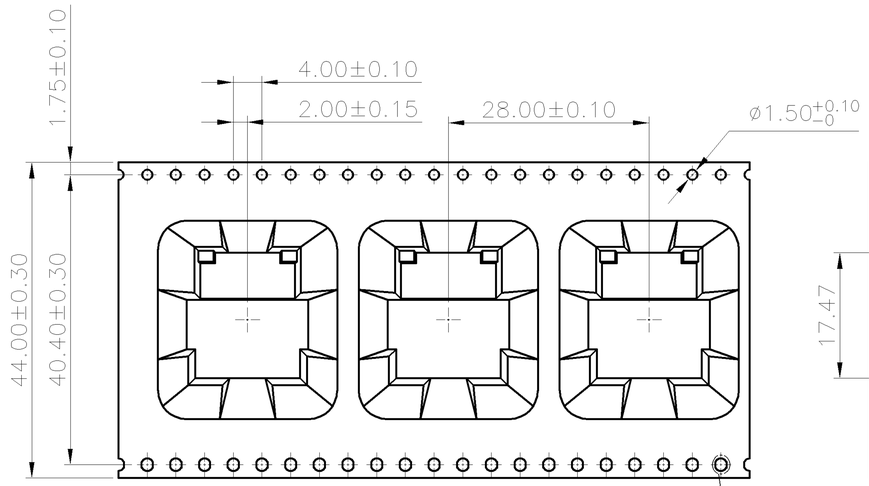

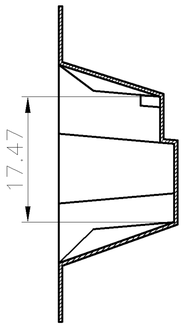

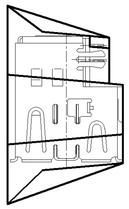

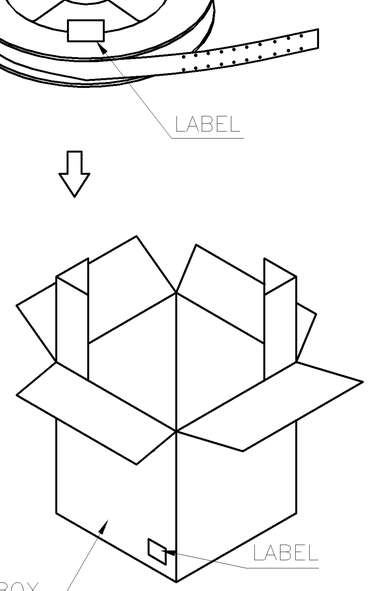

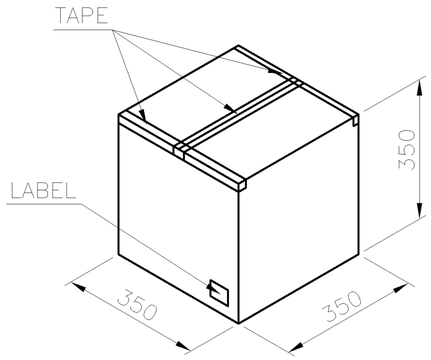

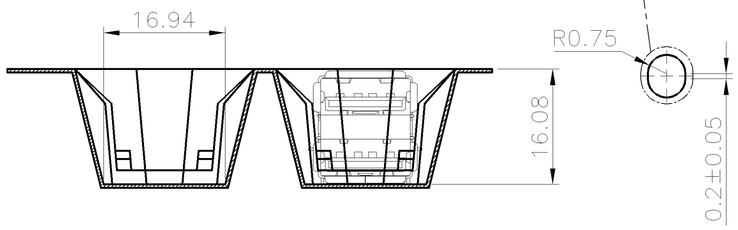

PCS/ REEL	REELS/ BOX	QUANTITY (PCS)	G/W (Kg)	N/W (Kg)	PART NUMBER
120	7	840	9.05	3.96	3–1734062–4
					3–1734062–3

THIS DRAWING IS A CONTROLLED DOCUMENT.

DIMENSIONS: MM

TOLERANCES UNLESS OTHERWISE SPECIFIED:
0 PLC ± –
1 PLC ± –
2 PLC ± –
3 PLC ± –
4 PLC ± –
ANGLES ± –

MATERIAL –

FINISH –

DWN
CHK
APVD
PRODUCT SPEC —
APPLICATION SPEC —
WEIGHT —

TE Connectivity

NAME
USB CONNECTOR, A SERIES, STACKED, OFFSET TYPE

SIZE	CAGE CODE	DRAWING NO	RESTRICTED TO
A3	00779	C–1734062	—

CUSTOMER DRAWING | SCALE — | SHEET 17 OF 24 | REV G

THIS DRAWING IS UNPUBLISHED. RELEASED FOR PUBLICATION – ,– .
© COPYRIGHT – BY TYCO ELECTRONICS CORPORATION. ALL RIGHTS RESERVED.

LOC	DIST
DW	—

REVISIONS

P	LTR	DESCRIPTION	DATE	DWN	APVD
		SEE SHEET 1.			

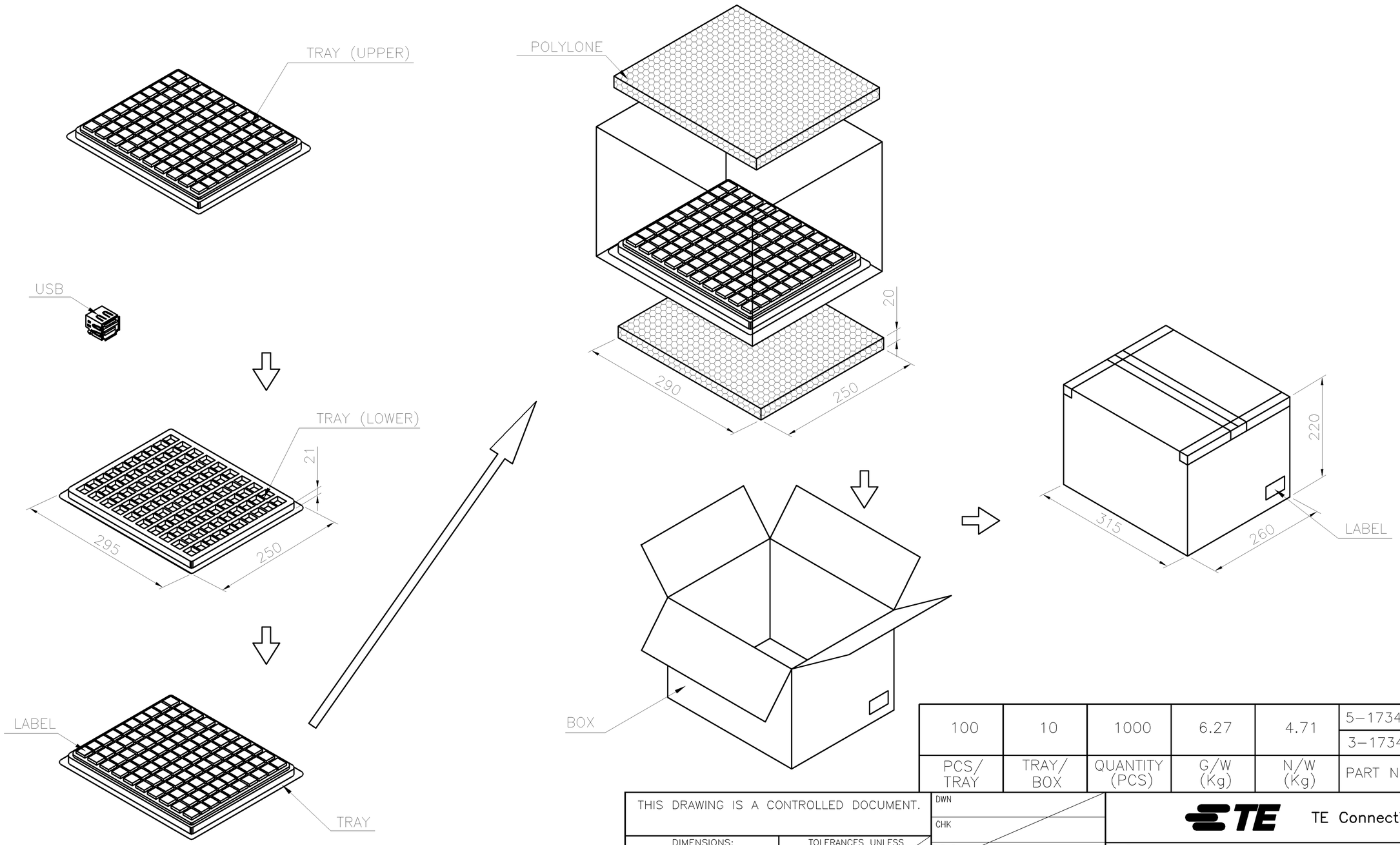

PCS/ TRAY	TRAY/ BOX	QUANTITY (PCS)	G/W (Kg)	N/W (Kg)	PART NUMBER	
100	10	1000	6.27	4.71	5–1734062–2	OBSOLETE
					3–1734062–1	

THIS DRAWING IS A CONTROLLED DOCUMENT.

DIMENSIONS: MM

TOLERANCES UNLESS OTHERWISE SPECIFIED:

0 PLC	± –
1 PLC	± –
2 PLC	± –
3 PLC	± –
4 PLC	± –
ANGLES	± –

MATERIAL –

FINISH –

DWN

CHK

APVD

PRODUCT SPEC —

APPLICATION SPEC —

WEIGHT —

TE Connectivity

NAME

USB CONNECTOR, A SERIES, STACKED, OFFSET TYPE

SIZE	CAGE CODE	DRAWING NO	RESTRICTED TO
A3	00779	C–1734062	—

CUSTOMER DRAWING | SCALE — | SHEET 18 OF 24 | REV G

THIS DRAWING IS UNPUBLISHED. RELEASED FOR PUBLICATION -,- .
© COPYRIGHT - BY TYCO ELECTRONICS CORPORATION. ALL RIGHTS RESERVED.

LOC	DIST
DW	—

REVISIONS

P	LTR	DESCRIPTION	DATE	DWN	APVD
		SEE SHEET 1.			

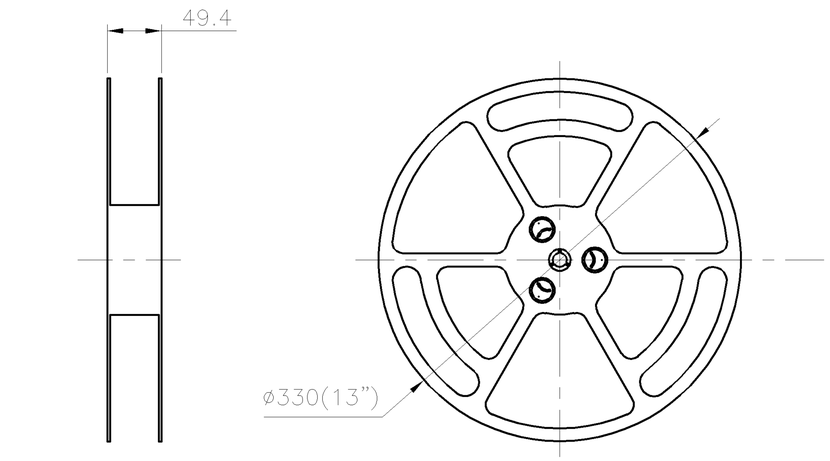

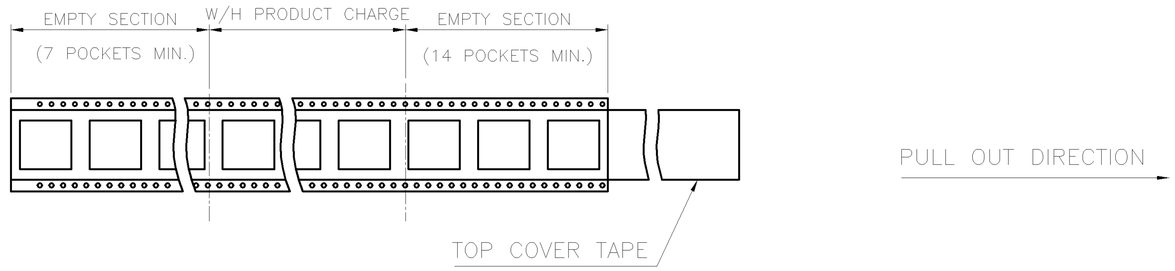

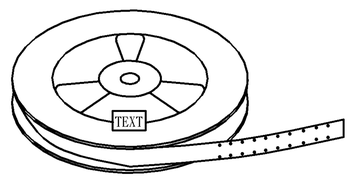

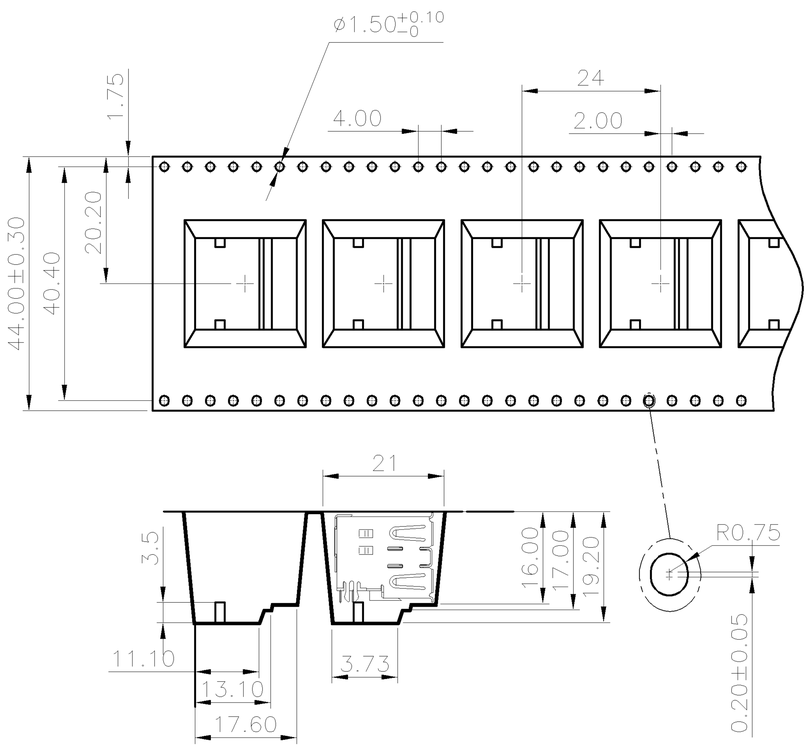

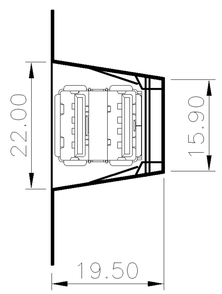

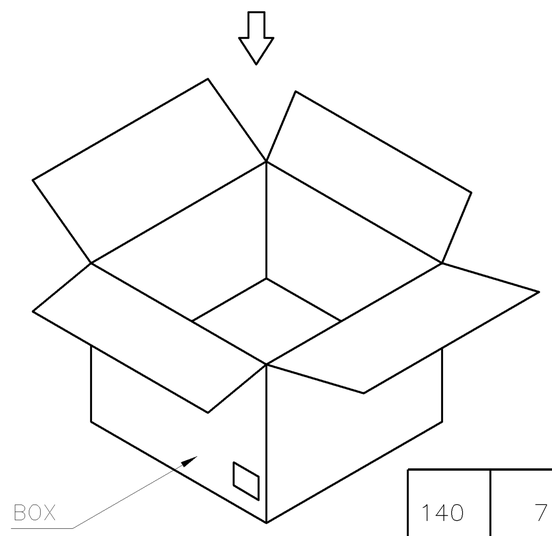

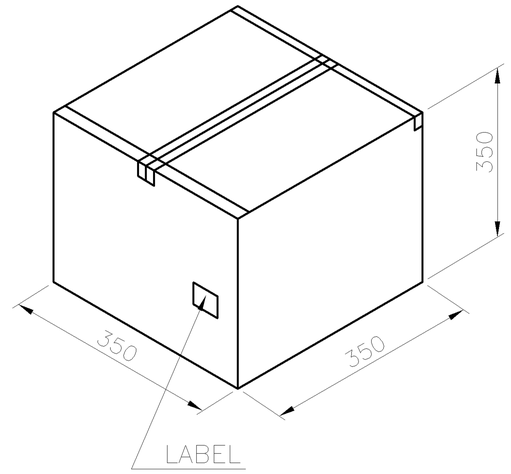

PCS/ REEL	REELS/ BOX	QUANTITY (PCS)	G/W (Kg)	N/W (Kg)	PART NUMBER	
140	7	980	8.60	4.62	5-1734062-1	OBSOLETE

THIS DRAWING IS A CONTROLLED DOCUMENT.

DIMENSIONS: MM

TOLERANCES UNLESS OTHERWISE SPECIFIED:
0 PLC ± -
1 PLC ± -
2 PLC ± -
3 PLC ± -
4 PLC ± -
ANGLES ± -

MATERIAL -

FINISH -

DWN
CHK
APVD
PRODUCT SPEC —
APPLICATION SPEC —
WEIGHT —

TE Connectivity

NAME
USB CONNECTOR, A SERIES, STACKED, OFFSET TYPE

SIZE	CAGE CODE	DRAWING NO	RESTRICTED TO
A3	00779	C-1734062	—

CUSTOMER DRAWING | SCALE — | SHEET 19 OF 24 | REV G

THIS DRAWING IS UNPUBLISHED. RELEASED FOR PUBLICATION -,- .
© COPYRIGHT - BY TYCO ELECTRONICS CORPORATION. ALL RIGHTS RESERVED.

LOC	DIST
DW	—

REVISIONS

P	LTR	DESCRIPTION	DATE	DWN	APVD
		SEE SHEET 1.			

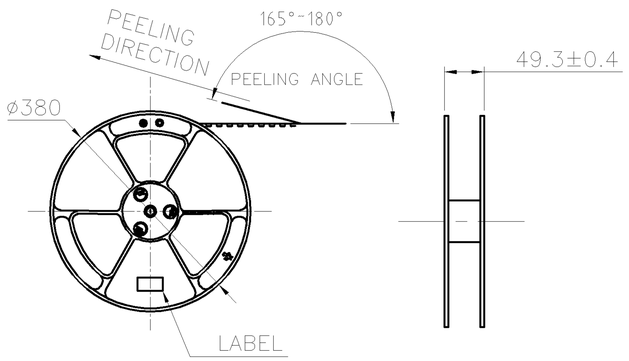

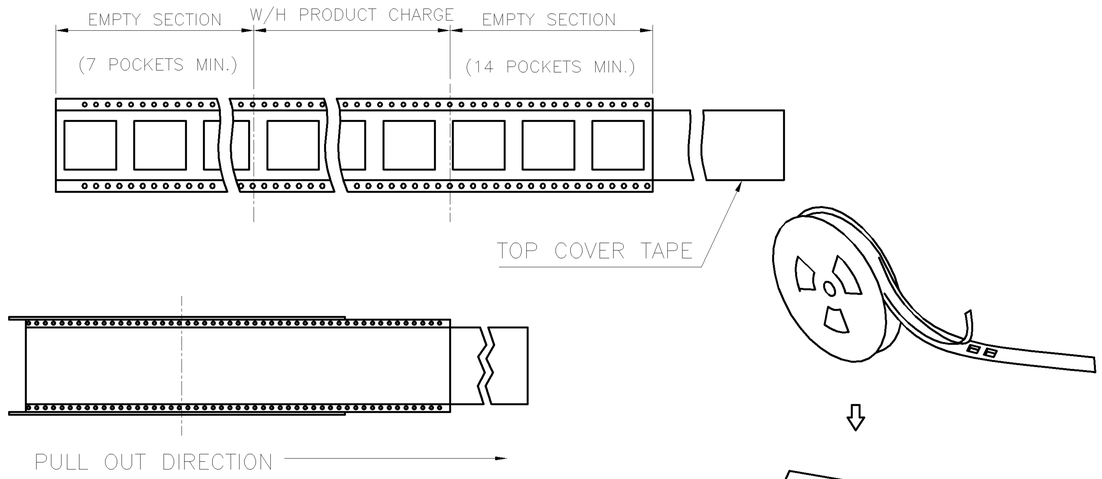

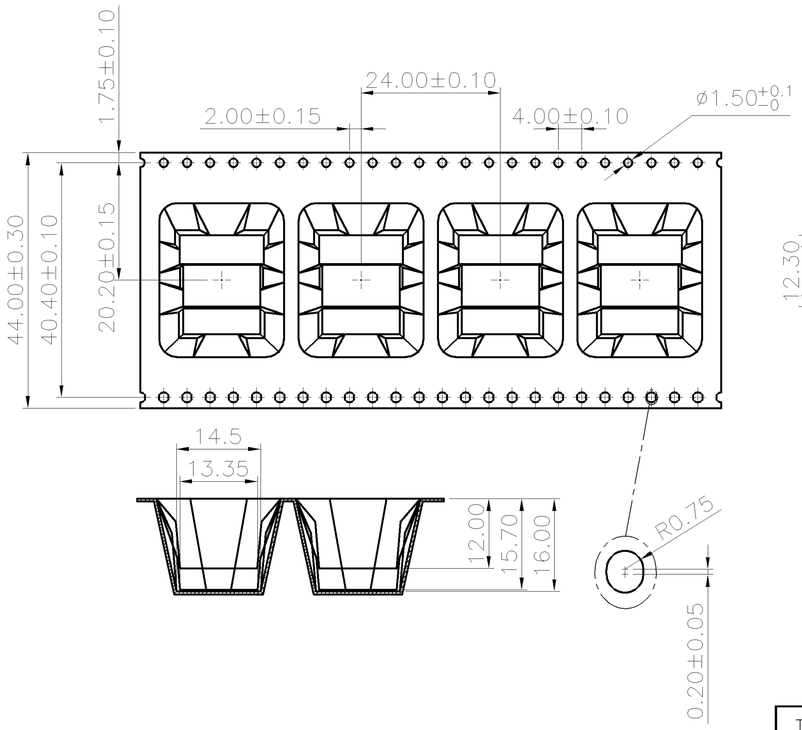

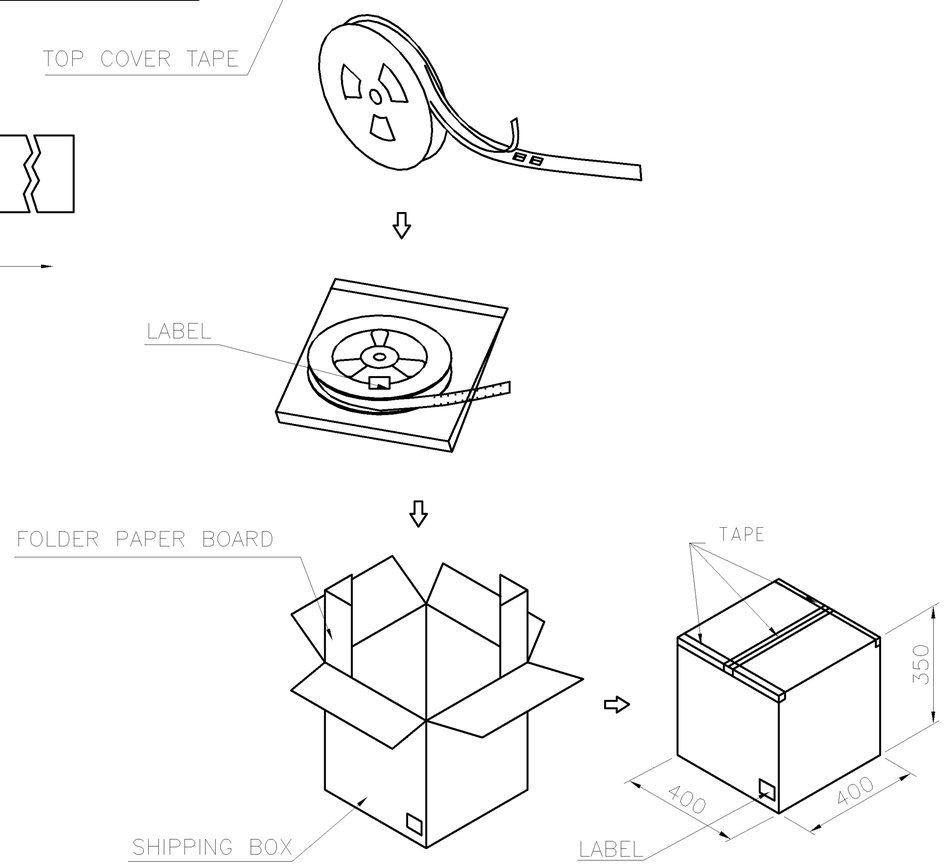

11.20 Kg	6.10 Kg	200	7	1400 PCS	4-1734062-2
GROSS WEIGHT	NET WEIGHT	PCS/REEL	REELS /CARTON	QUANTITY	PART NUMBER

THIS DRAWING IS A CONTROLLED DOCUMENT.

DIMENSIONS: MM

TOLERANCES UNLESS OTHERWISE SPECIFIED:
0 PLC ± –
1 PLC ± –
2 PLC ± –
3 PLC ± –
4 PLC ± –
ANGLES ± –

MATERIAL –

FINISH –

DWN
CHK
APVD
PRODUCT SPEC —
APPLICATION SPEC —
WEIGHT —

TE Connectivity

NAME
USB CONNECTOR, A SERIES, STACKED, OFFSET TYPE

SIZE	CAGE CODE	DRAWING NO	RESTRICTED TO
A3	00779	C-1734062	—

CUSTOMER DRAWING | SCALE — | SHEET 20 OF 24 | REV G

THIS DRAWING IS UNPUBLISHED. RELEASED FOR PUBLICATION -,- .
© COPYRIGHT - BY TYCO ELECTRONICS CORPORATION. ALL RIGHTS RESERVED.

LOC	DIST
DW	—

REVISIONS

P	LTR	DESCRIPTION	DATE	DWN	APVD
		SEE SHEET 1.			

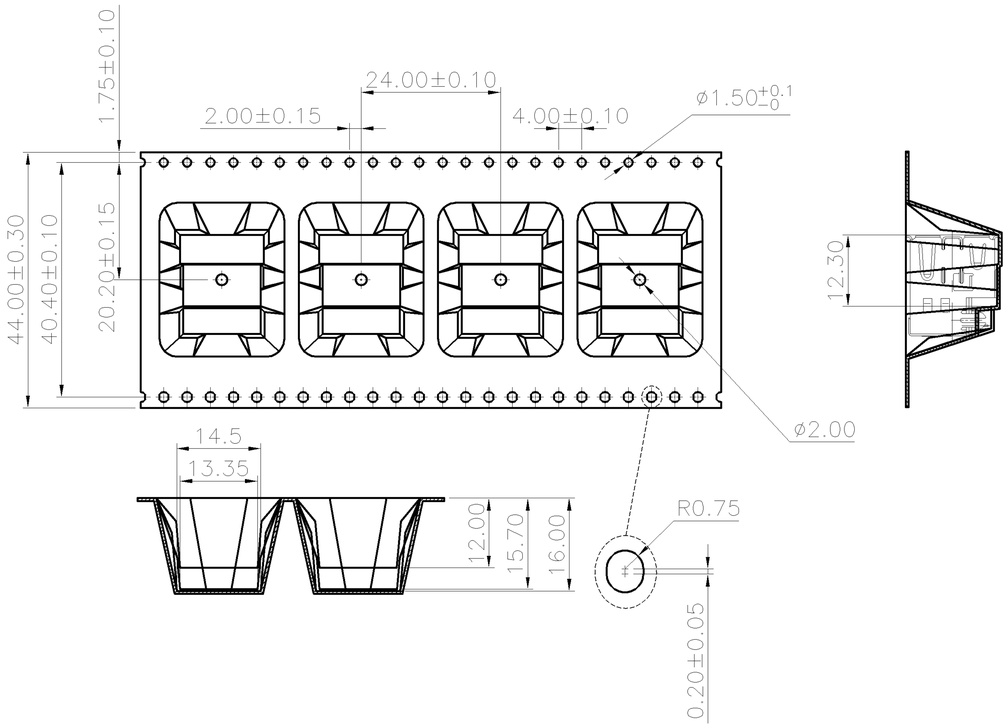

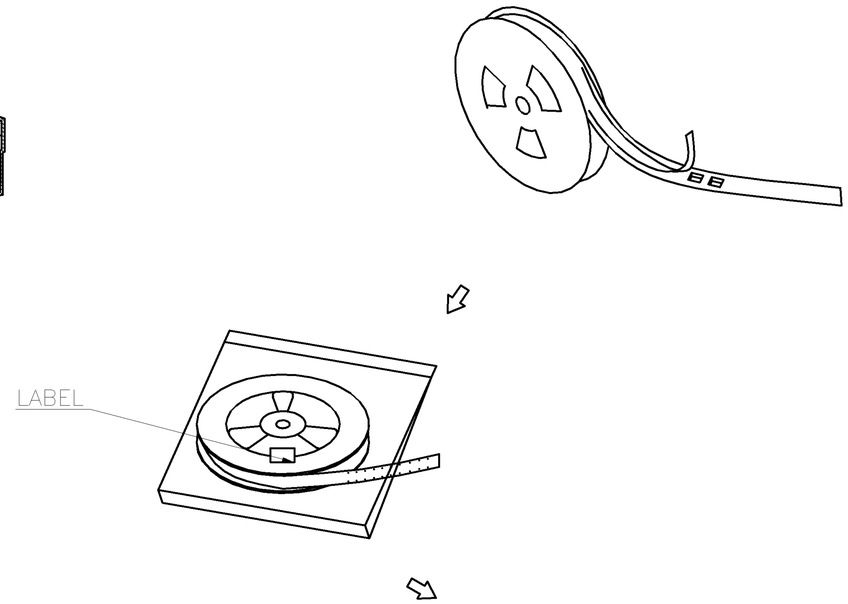

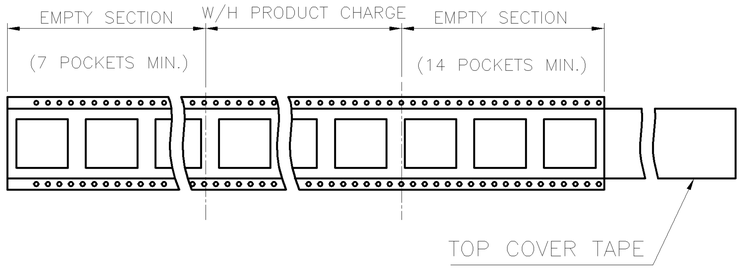

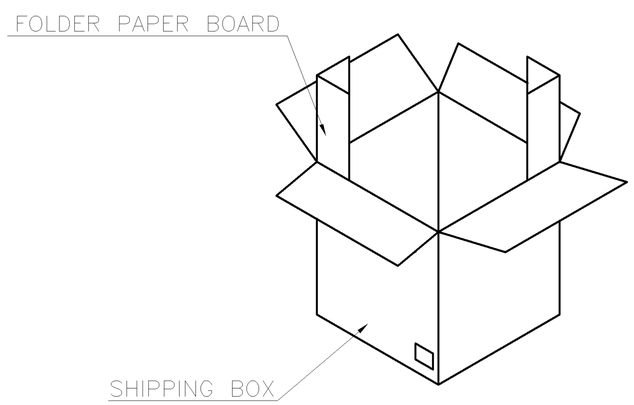

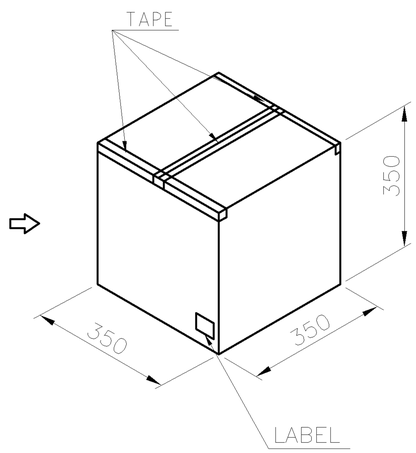

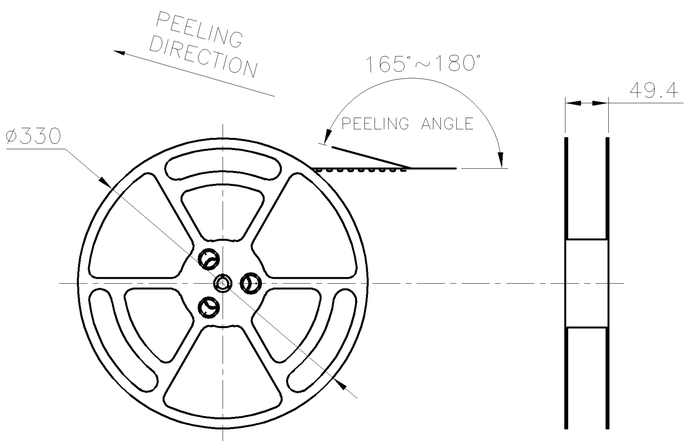

GROSS WEIGHT	NET WEIGHT	PCS/REEL	REELS /CARTON	QUANTITY	PART NUMBER
7.01 Kg	2.98 Kg	100	7	700 PCS	4-1734062-3

THIS DRAWING IS A CONTROLLED DOCUMENT.

DIMENSIONS: MM

TOLERANCES UNLESS OTHERWISE SPECIFIED:
0 PLC ± –
1 PLC ± –
2 PLC ± –
3 PLC ± –
4 PLC ± –
ANGLES ± –

MATERIAL –

FINISH –

DWN
CHK
APVD
PRODUCT SPEC —
APPLICATION SPEC —
WEIGHT —

TE Connectivity

NAME
USB CONNECTOR, A SERIES, STACKED, OFFSET TYPE

SIZE	CAGE CODE	DRAWING NO	RESTRICTED TO
A3	00779	C-1734062	—

CUSTOMER DRAWING | SCALE — | SHEET 21 OF 24 | REV G

THIS DRAWING IS UNPUBLISHED. RELEASED FOR PUBLICATION -,- .
© COPYRIGHT - BY TYCO ELECTRONICS CORPORATION. ALL RIGHTS RESERVED.

LOC	DIST
DW	—

REVISIONS

P	LTR	DESCRIPTION	DATE	DWN	APVD
		SEE SHEET 1.			

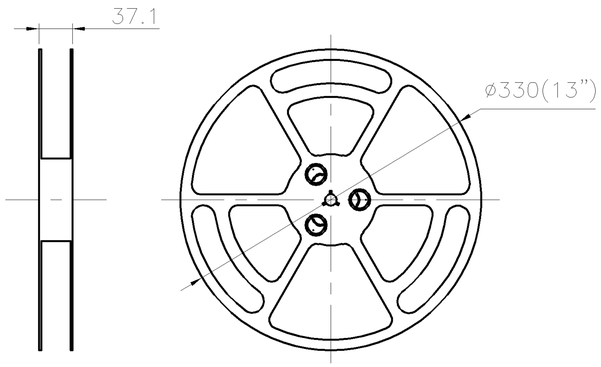

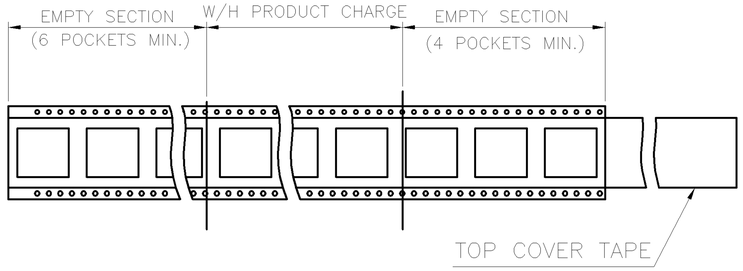

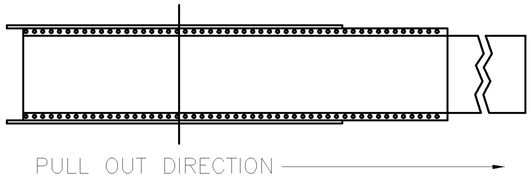

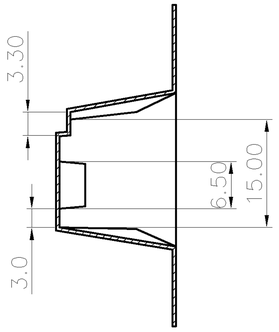

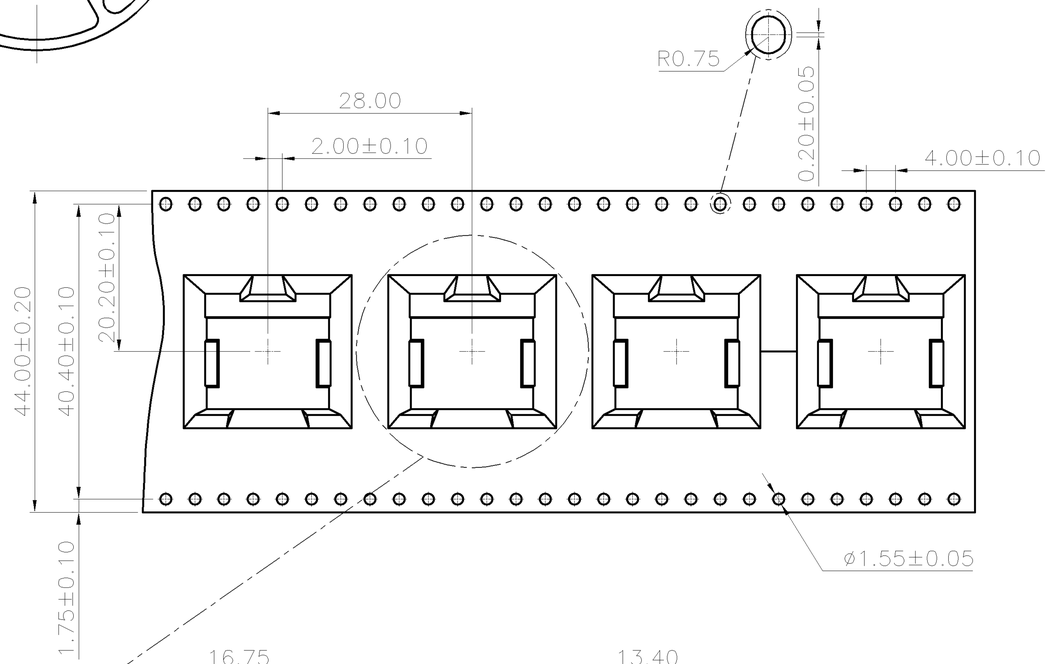

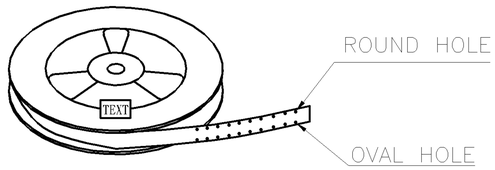

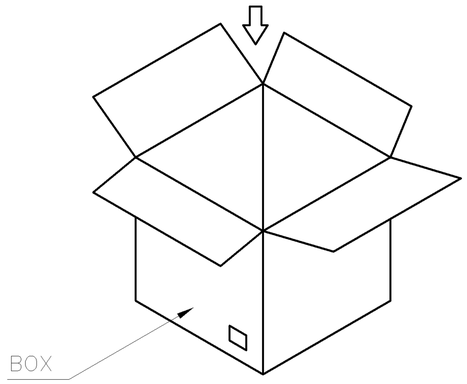

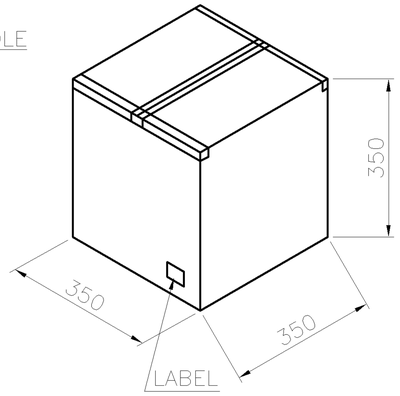

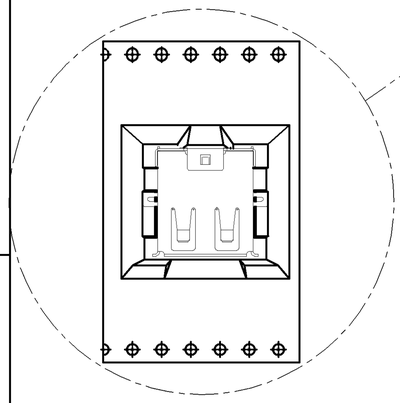

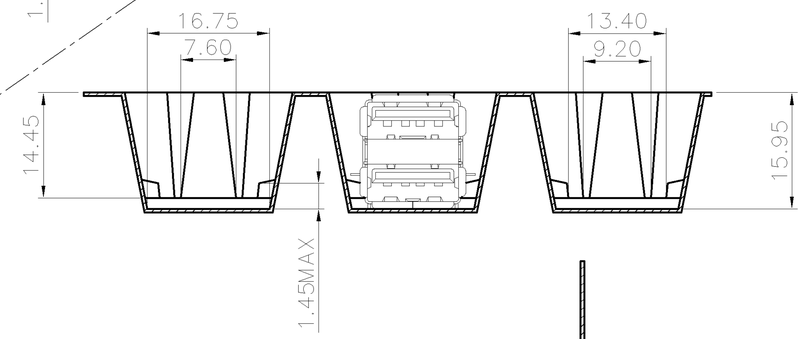

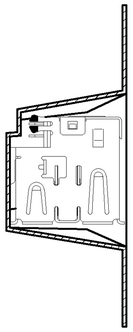

150	7	1050	8.93	4.95	6-1734062-1
PCS/ REEL	REELS/ BOX	QUANTITY (PCS)	G/W (Kg)	N/W (Kg)	PART NUMBER

THIS DRAWING IS A CONTROLLED DOCUMENT.

DIMENSIONS: MM

TOLERANCES UNLESS OTHERWISE SPECIFIED:
0 PLC ± –
1 PLC ± –
2 PLC ± –
3 PLC ± –
4 PLC ± –
ANGLES ± –

MATERIAL –

FINISH –

DWN
CHK
APVD
PRODUCT SPEC —
APPLICATION SPEC —
WEIGHT —

TE Connectivity

NAME
USB CONNECTOR, A SERIES, STACKED, OFFSET TYPE

SIZE	CAGE CODE	DRAWING NO	RESTRICTED TO
A3	00779	C-1734062	—

CUSTOMER DRAWING | SCALE — | SHEET 22 OF 24 | REV G

THIS DRAWING IS UNPUBLISHED. RELEASED FOR PUBLICATION -,- .
© COPYRIGHT - BY TYCO ELECTRONICS CORPORATION. ALL RIGHTS RESERVED.

LOC	DIST
DW	—

REVISIONS

P	LTR	DESCRIPTION	DATE	DWN	APVD
		SEE SHEET 1.			

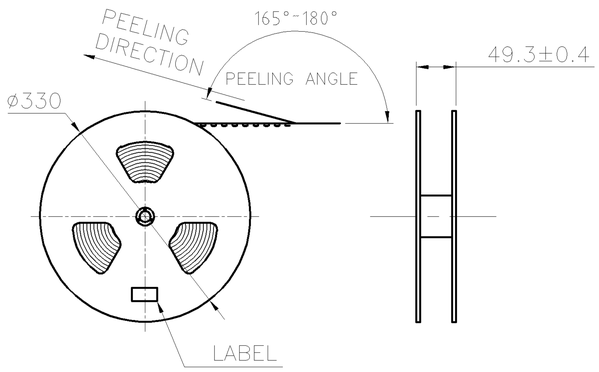

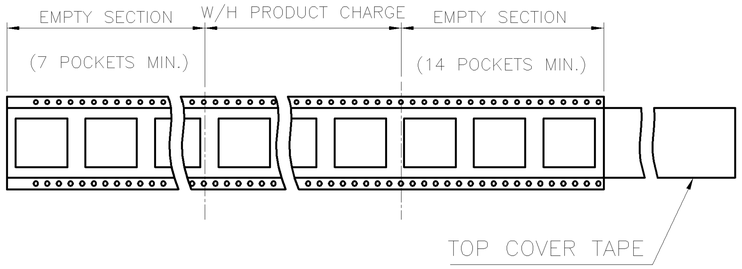

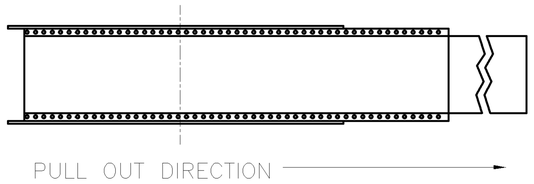

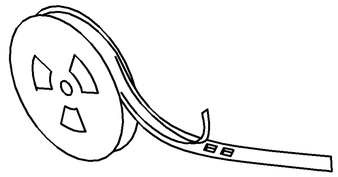

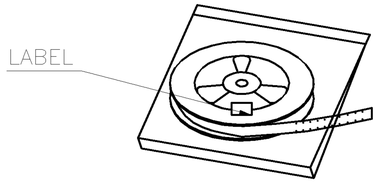

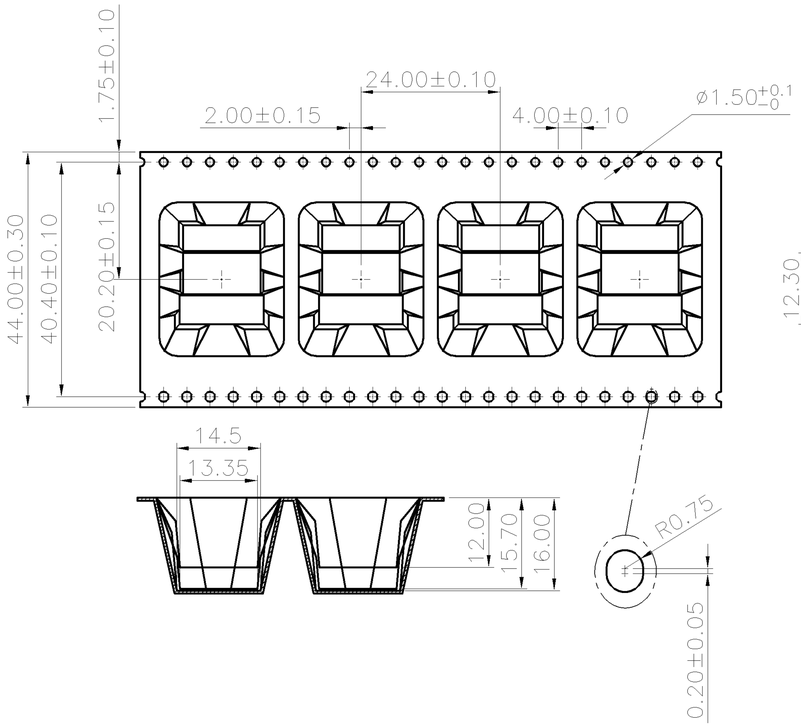

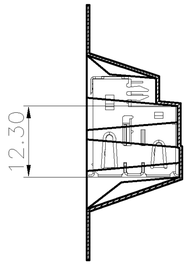

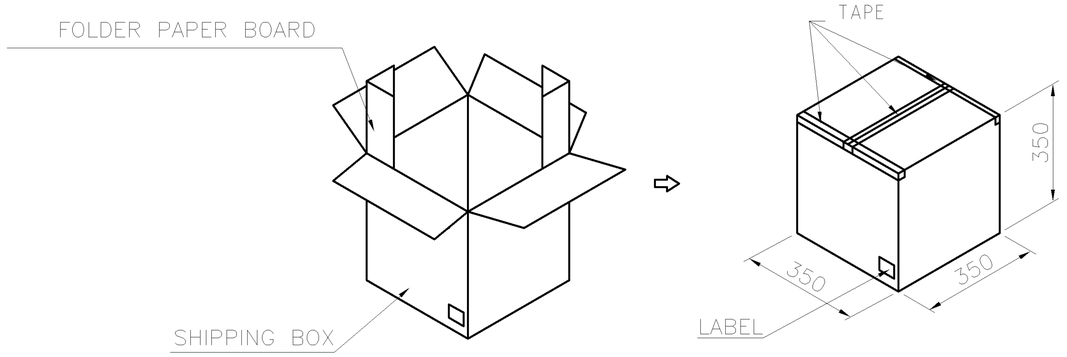

130	7	910	7.94	3.91	7-1734062-1
PCS/ REEL	REELS/ BOX	QUANTITY (PCS)	G/W (Kg)	N/W (Kg)	PART NUMBER

THIS DRAWING IS A CONTROLLED DOCUMENT.

DIMENSIONS: MM

TOLERANCES UNLESS OTHERWISE SPECIFIED:

0 PLC	± -
1 PLC	± -
2 PLC	± -
3 PLC	± -
4 PLC	± -
ANGLES	± -

MATERIAL: -

FINISH: -

DWN
CHK
APVD
PRODUCT SPEC: —
APPLICATION SPEC: —
WEIGHT: —

TE Connectivity

NAME: USB CONNECTOR, A SERIES, STACKED, OFFSET TYPE

SIZE	CAGE CODE	DRAWING NO	RESTRICTED TO
A3	00779	C-1734062	—

CUSTOMER DRAWING | SCALE — | SHEET 23 OF 24 | REV G

THIS DRAWING IS UNPUBLISHED. RELEASED FOR PUBLICATION -,- .
© COPYRIGHT - BY TYCO ELECTRONICS CORPORATION. ALL RIGHTS RESERVED.

LOC	DIST
DW	—

REVISIONS

P	LTR	DESCRIPTION	DATE	DWN	APVD
		SEE SHEET 1.			

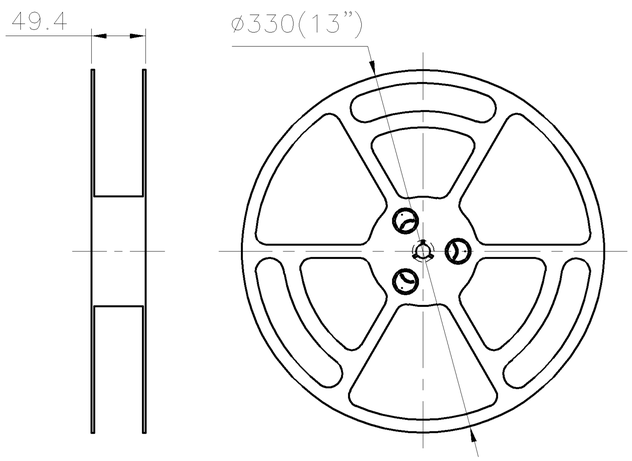

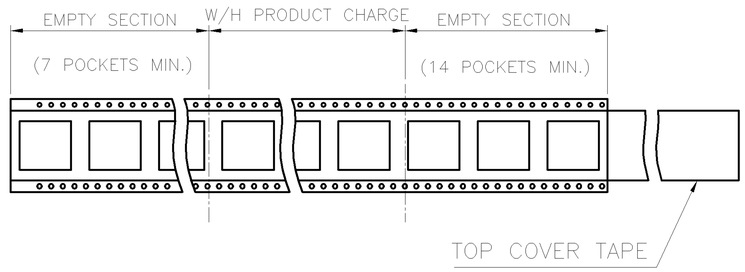

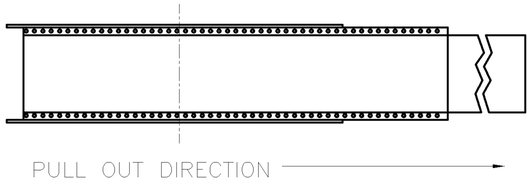

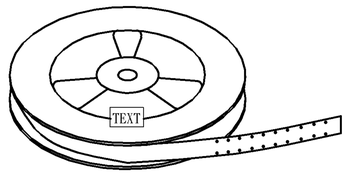

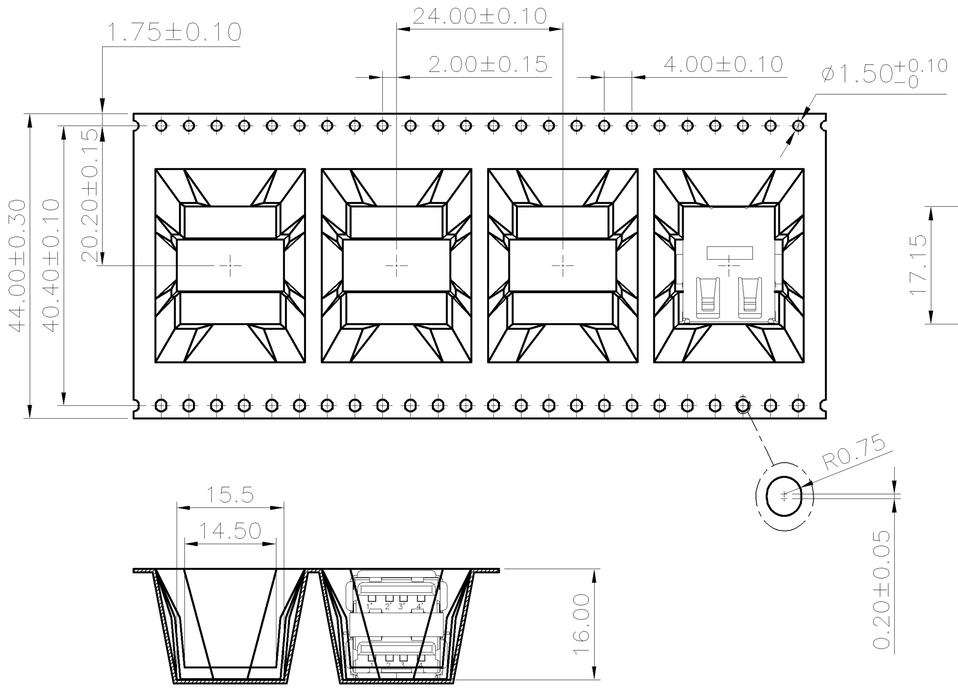

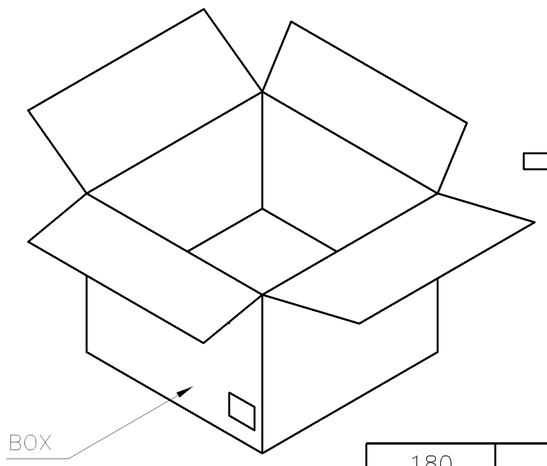

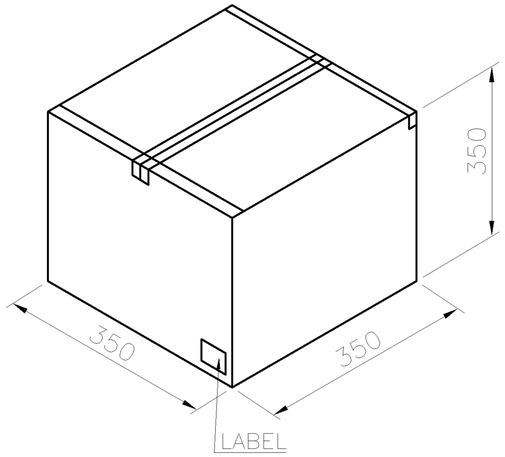

180	7	1260	9.40	5.42	8-1734062-1
PCS/ REEL	REELS/ BOX	QUANTITY (PCS)	G/W (Kg)	N/W (Kg)	PART NUMBER

THIS DRAWING IS A CONTROLLED DOCUMENT.

DIMENSIONS: MM

TOLERANCES UNLESS OTHERWISE SPECIFIED:
0 PLC ± –
1 PLC ± –
2 PLC ± –
3 PLC ± –
4 PLC ± –
ANGLES ± –

MATERIAL –

FINISH –

DWN
CHK
APVD
PRODUCT SPEC —
APPLICATION SPEC —
WEIGHT —

TE Connectivity

NAME
USB CONNECTOR, A SERIES, STACKED, OFFSET TYPE

SIZE	CAGE CODE	DRAWING NO	RESTRICTED TO
A3	00779	C-1734062	—

CUSTOMER DRAWING | SCALE — | SHEET 24 OF 24 | REV G

О компании

ООО "ТрейдЭлектроникс" - это оперативные поставки широкого спектра электронных компонентов отечественного и импортного производства напрямую от производителей и с крупнейших мировых складов. Реализуемая нашей компанией продукция насчитывает более полумиллиона наименований.

Благодаря этому наша компания предлагает к поставке практически не ограниченный ассортимент компонентов как оптовыми, мелкооптовыми партиями, так и в розницу.

Наличие собственной эффективной системы логистики обеспечивает надежную поставку продукции по конкурентным ценам в точно указанные сроки.

Срок поставки со стоков в **Европе и Америке – от 3 до 14 дней.**

Срок поставки из **Азии – от 10 дней.**

Благодаря развитой сети поставщиков, помогаем в поиске и приобретении экзотичных или снятых с производства компонентов.

Предоставляем спец цены на элементы для создания инженерных сэмплов.

Упорный труд, качественный результат дают нам право быть уверенными в себе и надежными для наших клиентов.

Наша компания это:

- Гарантия качества поставляемой продукции
- Широкий ассортимент
- Минимальные сроки поставок
- Техническая поддержка
- Подбор комплектации
- Индивидуальный подход
- Гибкое ценообразование

Наша организация особенно сильна в поставках модулей, микросхем, пассивных компонентов, ксайленсах (XC), EPF, EPM и силовой электроники.

Большой выбор предлагаемой продукции, различные виды оплаты и доставки, позволят Вам сэкономить время и получить максимум выгоды от сотрудничества с нами!

Trade Electronics.ru

гарантия бесперебойности производства и качества выпускаемой продукции

Перечень производителей, продукцию которых мы поставляем на российский рынок

AMD
ANALOG DEVICES
BOURNS
Coilcraft
élantec Semiconductor, Inc.
HARRIS
Infineon
JRC
MICREL
MOTOROLA
nichicon
PHILIPS
ROHM
SGS-THOMSON
Sipex
TAIYO YUDEN
TOKO
ZILOG
Winbond
Allegro
ATMEL
BURR - BROWN
EXAR
HITACHI
intel
Lattice
muRata
OKI
QUALCOMM
SAMSUNG
SHARP
SONY
TDK
TOSHIBA
KYOCERA
ALTERA
AVX
CITILYST
CYPRESS
FAIRCHILD SEMICONDUCTOR
HOLTEK
International IOR Rectifier
LINEAR TECHNOLOGY
MITSUBISHI
National Semiconductor
ON Semiconductor
REALTEK
SANYO
SHINDENGEN
SGS
TECCOR
TUNDRA
XILINX
Amphenol
Bay Linear
CIRRUS LOGIC
DALLAS
FUJITSU
IDT
intersil
MAXIM
molex
NEC
Panasonic
RENESAS
SII
SIEMENS
ST
Texas Instruments
VISHAY
ZETEX SEMICONDUCTORS

Trade Electronics.ru

гарантия бесперебойности производства и качества выпускаемой продукции

С удовольствием будем прорабатывать для Вас поставки всех необходимых компонентов по текущим запросам для скорейшего выявления групп элементов, по которым сотрудничество именно с нашей компанией будет для Вас максимально выгодным!

С уважением,

Менеджер отдела продаж ООО

«Трейд Электроникс»

Шишлаков Евгений

8 (495)668-30-28 доб 169

manager28@tradeelectronics.ru

http://www.tradeelectronics.ru/