19-4323; Rev 15; 1/06

+5V-Powered, Multichannel RS-232 Drivers/Receivers

General Description

The MAX220–MAX249 family of line drivers/receivers is intended for all EIA/TIA-232E and V.28/V.24 communications interfaces, particularly applications where ±12V is not available.

These parts are especially useful in battery-powered systems, since their low-power shutdown mode reduces power dissipation to less than 5µW. The MAX225, MAX233, MAX235, and MAX245/MAX246/MAX247 use no external components and are recommended for applications where printed circuit board space is critical.

Applications

Portable Computers

Low-Power Modems

Interface Translation

Battery-Powered RS-232 Systems

Multidrop RS-232 Networks

AutoShutdown and UCSP are trademarks of Maxim Integrated Products, Inc.

Next-Generation Device Features

- **For Low-Voltage, Integrated ESD Applications MAX3222E/MAX3232E/MAX3237E/MAX3241E/MAX3246E: +3.0V to +5.5V, Low-Power, Up to 1Mbps, True RS-232 Transceivers Using Four 0.1µF External Capacitors (MAX3246E Available in a UCSP™ Package)**
- **For Low-Cost Applications MAX221E: ±15kV ESD-Protected, +5V, 1µA, Single RS-232 Transceiver with AutoShutdown™**

Ordering Information

PART	TEMP RANGE	PIN-PACKAGE
MAX220CPE	0°C to +70°C	16 Plastic DIP
MAX220CSE	0°C to +70°C	16 Narrow SO
MAX220CWE	0°C to +70°C	16 Wide SO
MAX220C/D	0°C to +70°C	Dice*
MAX220EPE	-40°C to +85°C	16 Plastic DIP
MAX220ESE	-40°C to +85°C	16 Narrow SO
MAX220EWE	-40°C to +85°C	16 Wide SO
MAX220EJE	-40°C to +85°C	16 CERDIP
MAX220MJE	-55°C to +125°C	16 CERDIP

Ordering Information continued at end of data sheet.

**Contact factory for dice specifications.*

Selection Table

Part Number	Power Supply (V)	No. of RS-232 Drivers/Rx	No. of Ext. Caps	Nominal Cap. Value (µF)	SHDN & Three-State	Rx Active in SHDN	Data Rate (kbps)	Features
MAX220	+5	2/2	4	0.047/0.33	No	—	120	Ultra-low-power, industry-standard pinout
MAX222	+5	2/2	4	0.1	Yes	—	200	Low-power shutdown
MAX223 (MAX213)	+5	4/5	4	1.0 (0.1)	Yes	✔	120	MAX241 and receivers active in shutdown
MAX225	+5	5/5	0	—	Yes	✔	120	Available in SO
MAX230 (MAX200)	+5	5/0	4	1.0 (0.1)	Yes	—	120	5 drivers with shutdown
MAX231 (MAX201)	+5 and +7.5 to +13.2	2/2	2	1.0 (0.1)	No	—	120	Standard +5/+12V or battery supplies; same functions as MAX232
MAX232 (MAX202)	+5	2/2	4	1.0 (0.1)	No	—	120 (64)	Industry standard
MAX232A	+5	2/2	4	0.1	No	—	200	Higher slew rate, small caps
MAX233 (MAX203)	+5	2/2	0	—	No	—	120	No external caps
MAX233A	+5	2/2	0	—	No	—	200	No external caps, high slew rate
MAX234 (MAX204)	+5	4/0	4	1.0 (0.1)	No	—	120	Replaces 1488
MAX235 (MAX205)	+5	5/5	0	—	Yes	—	120	No external caps
MAX236 (MAX206)	+5	4/3	4	1.0 (0.1)	Yes	—	120	Shutdown, three state
MAX237 (MAX207)	+5	5/3	4	1.0 (0.1)	No	—	120	Complements IBM PC serial port
MAX238 (MAX208)	+5	4/4	4	1.0 (0.1)	No	—	120	Replaces 1488 and 1489
MAX239 (MAX209)	+5 and +7.5 to +13.2	3/5	2	1.0 (0.1)	No	—	120	Standard +5/+12V or battery supplies; single-package solution for IBM PC serial port
MAX240	+5	5/5	4	1.0	Yes	—	120	DIP or flatpack package
MAX241 (MAX211)	+5	4/5	4	1.0 (0.1)	Yes	—	120	Complete IBM PC serial port
MAX242	+5	2/2	4	0.1	Yes	✔	200	Separate shutdown and enable
MAX243	+5	2/2	4	0.1	No	—	200	Open-line detection simplifies cabling
MAX244	+5	8/10	4	1.0	No	—	120	High slew rate
MAX245	+5	8/10	0	—	Yes	✔	120	High slew rate, int. caps, two shutdown modes
MAX246	+5	8/10	0	—	Yes	✔	120	High slew rate, int. caps, three shutdown modes
MAX247	+5	8/9	0	—	Yes	✔	120	High slew rate, int. caps, nine operating modes
MAX248	+5	8/8	4	1.0	Yes	✔	120	High slew rate, selective half-chip enables
MAX249	+5	6/10	4	1.0	Yes	✔	120	Available in quad flatpack package

For pricing, delivery, and ordering information, please contact Maxim/Dallas Direct! at 1-888-629-4642, or visit Maxim's website at www.maxim-ic.com.

+5V-Powered, Multichannel RS-232 Drivers/Receivers

ABSOLUTE MAXIMUM RATINGS—MAX220/222/232A/233A/242/243

Supply Voltage (V_{CC}) .....-0.3V to +6V
V+ (Note 1) .....(V_{CC} - 0.3V) to +14V
V- (Note 1) .....+0.3V to +14V
Input Voltages
T_{IN}.....-0.3V to (V_{CC} - 0.3V)
R_{IN} (Except MAX220) .....±30V
R_{IN} (MAX220).....±25V
T_{OUT} (Except MAX220) (Note 2) .....±15V
T_{OUT} (MAX220).....±13.2V
Output Voltages
T_{OUT}.....±15V
R_{OUT}.....-0.3V to (V_{CC} + 0.3V)
Driver/Receiver Output Short Circuited to GND.....Continuous
Continuous Power Dissipation (T_A = +70°C)
16-Pin Plastic DIP (derate 10.53mW/°C above +70°C)..842mW
18-Pin Plastic DIP (derate 11.11mW/°C above +70°C)..889mW
20-Pin Plastic DIP (derate 8.00mW/°C above +70°C) ..440mW
16-Pin Narrow SO (derate 8.70mW/°C above +70°C) ...696mW
16-Pin Wide SO (derate 9.52mW/°C above +70°C).....762mW
18-Pin Wide SO (derate 9.52mW/°C above +70°C).....762mW
20-Pin Wide SO (derate 10.00mW/°C above +70°C)....800mW
20-Pin SSOP (derate 8.00mW/°C above +70°C) 640mW
16-Pin CERDIP (derate 10.00mW/°C above +70°C).....800mW
18-Pin CERDIP (derate 10.53mW/°C above +70°C).....842mW
Operating Temperature Ranges
MAX2_ _AC_ _, MAX2_ _C_ _.....0°C to +70°C
MAX2_ _AE_ _, MAX2_ _E_ _ .....-40°C to +85°C
MAX2_ _AM_ _, MAX2_ _M_ _.....-55°C to +125°C
Storage Temperature Range .....-65°C to +160°C
Lead Temperature (soldering, 10s) (Note 3) .....+300°C

Note 1: For the MAX220, V+ and V- can have a maximum magnitude of 7V, but their absolute difference cannot exceed 13V.
Note 2: Input voltage measured with T_{OUT} in high-impedance state, $\overline{SHDN}$ or V_{CC} = 0V.
Note 3: Maximum reflow temperature for the MAX233A is +225°C.

Stresses beyond those listed under "Absolute Maximum Ratings" may cause permanent damage to the device. These are stress ratings only, and functional operation of the device at these or any other conditions beyond those indicated in the operational sections of the specifications is not implied. Exposure to absolute maximum rating conditions for extended periods may affect device reliability.

ELECTRICAL CHARACTERISTICS—MAX220/222/232A/233A/242/243

(V_{CC} = +5V ±10%, C1–C4 = 0.1µF, MAX220, C1 = 0.047µF, C2–C4 = 0.33µF, T_A = T_{MIN} to T_{MAX}, unless otherwise noted.)

PARAMETER	CONDITIONS		MIN	TYP	MAX	UNITS
RS-232 TRANSMITTERS						
Output Voltage Swing	All transmitter outputs loaded with 3kΩ to GND		±5	±8		V
Input Logic Threshold Low				1.4	0.8	V
Input Logic Threshold High	All devices except MAX220		2	1.4		V
	MAX220: V_{CC} = 5.0V		2.4			
Logic Pullup/Input Current	All except MAX220, normal operation			5	40	µA
	$\overline{SHDN}$ = 0V, MAX222/MAX242, shutdown, MAX220			±0.01	±1	
Output Leakage Current	V_{CC} = 5.5V, $\overline{SHDN}$ = 0V, V_{OUT} = ±15V, MAX222/MAX242			±0.01	±10	µA
	V_{CC} = $\overline{SHDN}$ = 0V	V_{OUT} = ±15V		±0.01	±10	
		MAX220, V_{OUT} = ±12V			±25	
Data Rate				200	116	kbps
Transmitter Output Resistance	V_{CC} = V+ = V- = 0V, V_{OUT} = ±2V		300	10M		Ω
Output Short-Circuit Current	V_{OUT} = 0V	V_{OUT} = 0V	±7	±22		mA
		MAX220			±60	
RS-232 RECEIVERS						
RS-232 Input Voltage Operating Range					±30	V
		MAX220			±25	
RS-232 Input Threshold Low	V_{CC} = 5V	All except MAX243 $R2_{IN}$	0.8	1.3		V
		MAX243 $R2_{IN}$ (Note 4)	-3			
RS-232 Input Threshold High	V_{CC} = 5V	All except MAX243 $R2_{IN}$		1.8	2.4	V
		MAX243 $R2_{IN}$ (Note 4)		-0.5	-0.1	

ELECTRICAL CHARACTERISTICS—MAX220/222/232A/233A/242/243 (continued)

(V_{CC} = +5V ±10%, C1–C4 = 0.1µF, MAX220, C1 = 0.047µF, C2–C4 = 0.33µF, T_A = T_{MIN} to T_{MAX}, unless otherwise noted.)

PARAMETER	CONDITIONS		MIN	TYP	MAX	UNITS
RS-232 Input Hysteresis	All except MAX220/MAX243, V_{CC} = 5V, no hysteresis in SHDN		0.2	0.5	1.0	V
	MAX220			0.3		
	MAX243			1		
RS-232 Input Resistance	T_A = +25°C (MAX220)		3	5	7	KΩ
			3	5	7	
TTL/CMOS Output Voltage Low	I_{OUT} = 3.2mA			0.2	0.4	V
	I_{OUT} = 1.6mA (MAX220)				0.4	
TTL/CMOS Output Voltage High	I_{OUT} = -1.0mA		3.5	V_{CC} - 0.2		V
TTL/CMOS Output Short-Circuit Current	Sourcing V_{OUT} = GND		-2	-10		mA
	Shrinking V_{OUT} = V_{CC}		10	30		
TTL/CMOS Output Leakage Current	$\overline{SHDN}$ = V_{CC} or $\overline{EN}$ = V_{CC} ($\overline{SHDN}$ = 0V for MAX222), 0V ≤ V_{OUT} ≤ V_{CC}			±0.05	±10	µA
EN Input Threshold Low	MAX242			1.4	0.8	V
EN Input Threshold High	MAX242		2.0	1.4		V
Operating Supply Voltage			4.5		5.5	V
V_{CC} Supply Current ($\overline{SHDN}$ = V_{CC}), figures 5, 6, 11, 19	No load	MAX220		0.5	2	µA
		MAX222/MAX232A/MAX233A/ MAX242/MAX243		4	10	
	3kΩ load both inputs	MAX220		12		
		MAX222/MAX232A/MAX233A/ MAX242/MAX243		15		
Shutdown Supply Current	MAX222/ MAX242	T_A = +25°C		0.1	10	µA
		T_A = 0°C to +70°C		2	50	
		T_A = -40°C to +85°C		2	50	
		T_A = -55°C to +125°C		35	100	
$\overline{SHDN}$ Input Leakage Current	MAX222/MAX242				±1	µA
$\overline{SHDN}$ Threshold Low	MAX222/MAX242			1.4	0.8	V
$\overline{SHDN}$ Threshold High	MAX222/MAX242		2.0	1.4		V
Transition Slew Rate	C_L = 50pF to 2500pF, R_L = 3kΩ to 7kΩ, V_{CC} = 5V, T_A = +25°C, measured from +3V to -3V or -3V	MAX222/MAX232A/MAX233/ MAX242/MAX243	6	12	30	V/µs
		MAX220	1.5	3	30.0	
Transmitter Propagation Delay TLL to RS-232 (Normal Operation), Figure 1	t_{PHLT}	MAX222/MAX232A/MAX233/ MAX242/MAX243		1.3	3.5	µs
		MAX220		4	10	
	t_{PLHT}	MAX222/MAX232A/MAX233/ MAX242/MAX243		1.5	3.5	
		MAX220		5	10	

Note 4: MAX243 $R2_{OUT}$ is guaranteed to be low when $R2_{IN}$ is ≥ 0V or is floating.

+5V-Powered, Multichannel RS-232 Drivers/Receivers

ELECTRICAL CHARACTERISTICS—MAX220/222/232A/233A/242/243 (continued)

(V_{CC} = +5V ±10%, C1–C4 = 0.1µF, MAX220, C1 = 0.047µF, C2–C4 = 0.33µF, T_A = T_{MIN} to T_{MAX}, unless otherwise noted.)

PARAMETER	CONDITIONS		MIN	TYP	MAX	UNITS
Receiver Propagation Delay RS-232 to TLL (Normal Operation), Figure 2	t_{PHLR}	MAX222/MAX232A/MAX233/ MAX242/MAX243		0.5	1	µs
		MAX220		0.6	3	
	t_{PLHR}	MAX222/MAX232A/MAX233/ MAX242/MAX243		0.6	1	
		MAX220		0.8	3	
Receiver Propagation Delay RS-232 to TLL (Shutdown), Figure 2	t_{PHLS}	MAX242		0.5	10	µs
	t_{PHLS}	MAX242		2.5	10	
Receiver-Output Enable Time, Figure 3	t_{ER}	MAX242		125	500	ns
Receiver-Output Disable Time, Figure 3	t_{DR}	MAX242		160	500	ns
Transmitter-Output Enable Time ($\overline{SHDN}$ Goes High), Figure 4	t_{ET}	MAX222/MAX242, 0.1µF caps (includes charge-pump start-up)		250		µs
Transmitter-Output Disable Time ($\overline{SHDN}$ Goes Low), Figure 4	t_{DT}	MAX222/MAX242, 0.1µF caps		600		ns
Transmitter + to - Propagation Delay Difference (Normal Operation)	t_{PHLT} - t_{PLHT}	MAX222/MAX232A/MAX233/ MAX242/MAX243		300		ns
		MAX220		2000		
Receiver + to - Propagation Delay Difference (Normal Operation)	t_{PHLR} - t_{PLHR}	MAX222/MAX232A/MAX233/ MAX242/MAX243		100		ns
		MAX220		225		

Typical Operating Characteristics

MAX220/MAX222/MAX232A/MAX233A/MAX242/MAX243

OUTPUT VOLTAGE vs. LOAD CURRENT

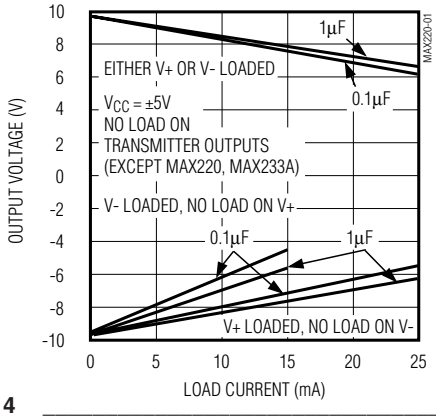

AVAILABLE OUTPUT CURRENT vs. DATA RATE

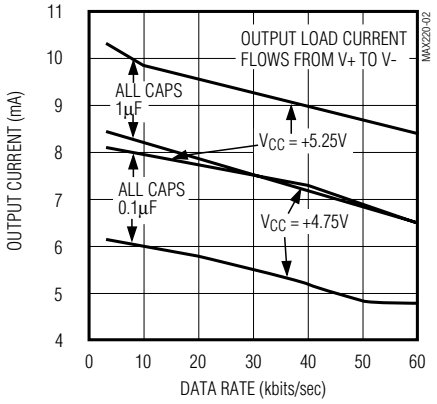

MAX222/MAX242 ON-TIME EXITING SHUTDOWN

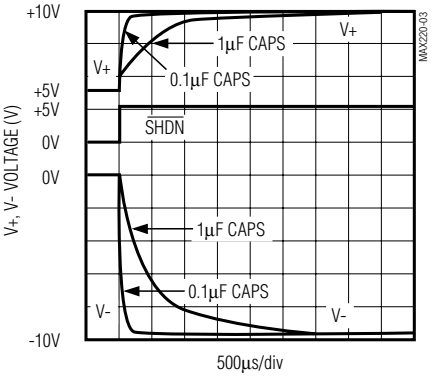

ABSOLUTE MAXIMUM RATINGS—MAX223/MAX230–MAX241

V_{CC} .....-0.3V to +6V
V+ .....(V_{CC} - 0.3V) to +14V
V- .....+0.3V to -14V
Input Voltages
T_{IN} .....-0.3V to (V_{CC} + 0.3V)
R_{IN}.....±30V
Output Voltages
T_{OUT} .....(V+ + 0.3V) to (V- - 0.3V)
R_{OUT}.....-0.3V to (V_{CC} + 0.3V)
Short-Circuit Duration, T_{OUT} .....Continuous
Continuous Power Dissipation (T_A = +70°C)
14-Pin Plastic DIP (derate 10.00mW/°C above +70°C)....800mW
16-Pin Plastic DIP (derate 10.53mW/°C above +70°C)....842mW
20-Pin Plastic DIP (derate 11.11mW/°C above +70°C)....889mW
24-Pin Narrow Plastic DIP
(derate 13.33mW/°C above +70°C) 1.07W
24-Pin Plastic DIP (derate 9.09mW/°C above +70°C).....500mW
16-Pin Wide SO (derate 9.52mW/°C above +70°C).....762mW
20-Pin Wide SO (derate 10 00mW/°C above +70°C).....800mW
24-Pin Wide SO (derate 11.76mW/°C above +70°C).....941mW
28-Pin Wide SO (derate 12.50mW/°C above +70°C) 1W
44-Pin Plastic FP (derate 11.11mW/°C above +70°C) 889mW
14-Pin CERDIP (derate 9.09mW/°C above +70°C) 727mW
16-Pin CERDIP (derate 10.00mW/°C above +70°C) 800mW
20-Pin CERDIP (derate 11.11mW/°C above +70°C) 889mW
24-Pin Narrow CERDIP
(derate 12.50mW/°C above +70°C) 1W
24-Pin Sidebraze (derate 20.0mW/°C above +70°C).....1.6W
28-Pin SSOP (derate 9.52mW/°C above +70°C).....762mW
Operating Temperature Ranges
MAX2 _ _ C _ _.....0°C to +70°C
MAX2 _ _ E _ _.....-40°C to +85°C
MAX2 _ _ M _ _ .....-55°C to +125°C
Storage Temperature Range .....-65°C to +160°C
Lead Temperature (soldering, 10s) (Note 4) .....+300°C

Note 4: Maximum reflow temperature for the MAX233/MAX235 is +225°C.

Stresses beyond those listed under "Absolute Maximum Ratings" may cause permanent damage to the device. These are stress ratings only, and functional operation of the device at these or any other conditions beyond those indicated in the operational sections of the specifications is not implied. Exposure to absolute maximum rating conditions for extended periods may affect device reliability.

ELECTRICAL CHARACTERISTICS—MAX223/MAX230–MAX241

(MAX223/230/232/234/236/237/238/240/241, V_{CC} = +5V ±10; MAX233/MAX235, V_{CC} = 5V ±5%, C1–C4 = 1.0µF; MAX231/MAX239, V_{CC} = 5V ±10%; V+ = 7.5V to 13.2V; T_A = T_{MIN} to T_{MAX}; unless otherwise noted.)

PARAMETER	CONDITIONS		MIN	TYP	MAX	UNITS
Output Voltage Swing	All transmitter outputs loaded with 3kΩ to ground		±5.0	±7.3		V
V_{CC} Power-Supply Current	No load, T_A = +25°C	MAX232/233		5	10	mA
		MAX223/230/234–238/240/241		7	15	
		MAX231/239		0.4	1	
V+ Power-Supply Current		MAX231		1.8	5	mA
		MAX239		5	15	
Shutdown Supply Current	T_A = +25°C	MAX223		15	50	µA
		MAX230/235/236/240/241		1	10	
Input Logic Threshold Low	T_{IN}; EN, $\overline{SHDN}$ (MAX233); $\overline{EN}$, SHDN (MAX230/235–241)				0.8	V
Input Logic Threshold High	T_{IN}		2.0			V
	EN, $\overline{SHDN}$ (MAX223); $\overline{EN}$, SHDN (MAX230/235/236/240/241)		2.4			
Logic Pull-Up Current	T_{IN} = 0V			1.5	200	µA
Receiver Input Voltage Operating Range			-30		+30	V

+5V-Powered, Multichannel RS-232 Drivers/Receivers

ELECTRICAL CHARACTERISTICS—MAX223/MAX230–MAX241 (continued)

(MAX223/230/232/234/236/237/238/240/241, V_{CC} = +5V ±10; MAX233/MAX235, V_{CC} = 5V ±5%, C1–C4 = 1.0µF; MAX231/MAX239, V_{CC} = 5V ±10%; V+ = 7.5V to 13.2V; T_A = T_{MIN} to T_{MAX}; unless otherwise noted.)

PARAMETER	CONDITIONS			MIN	TYP	MAX	UNITS
RS-232 Input Threshold Low	T_A = +25°C, V_{CC} = 5V	Normal operation $\overline{SHDN}$ = 5V (MAX223) SHDN = 0V (MAX235/236/240/241)		0.8	1.2		V
		Shutdown (MAX223) $\overline{SHDN}$ = 0V, EN = 5V ($R4_{IN}$, $R5_{IN}$)		0.6	1.5		
RS-232 Input Threshold High	T_A = +25°C, V_{CC} = 5V	Normal operation $\overline{SHDN}$ = 5V (MAX223) SHDN = 0V (MAX235/236/240/241)			1.7	2.4	V
		Shutdown (MAX223) $\overline{SHDN}$ = 0V, EN = 5V ($R4_{IN}$, $R5_{IN}$)			1.5	2.4	
RS-232 Input Hysteresis	V_{CC} = 5V, no hysteresis in shutdown			0.2	0.5	1.0	V
RS-232 Input Resistance	T_A = +25°C, V_{CC} = 5V			3	5	7	kΩ
TTL/CMOS Output Voltage Low	I_{OUT} = 1.6mA (MAX231/232/233, I_{OUT} = 3.2mA)					0.4	V
TTL/CMOS Output Voltage High	I_{OUT} = -1mA			3.5	V_{CC} - 0.4		V
TTL/CMOS Output Leakage Current	0V ≤ R_{OUT} ≤ V_{CC}; EN = 0V (MAX223); $\overline{EN}$ = V_{CC} (MAX235–241)				0.05	±10	µA
Receiver Output Enable Time	Normal operation	MAX223			600		ns
		MAX235/236/239/240/241			400		
Receiver Output Disable Time	Normal operation	MAX223			900		ns
		MAX235/236/239/240/241			250		
Propagation Delay	RS-232 IN to TTL/CMOS OUT, C_L = 150pF	Normal operation			0.5	10	µs
		$\overline{SHDN}$ = 0V (MAX223)	t_{PHLS}		4	40	
			t_{PLHS}		6	40	
Transition Region Slew Rate	MAX223/MAX230/MAX234–241, T_A = +25°C, V_{CC} = 5V, R_L = 3kΩ to 7kΩ, C_L = 50pF to 2500pF, measured from +3V to -3V or -3V to +3V			3	5.1	30	V/µs
	MAX231/MAX232/MAX233, T_A = +25°C, V_{CC} = 5V, R_L = 3kΩ to 7kΩ, C_L = 50pF to 2500pF, measured from +3V to -3V or -3V to +3V				4	30	
Transmitter Output Resistance	V_{CC} = V+ = V- = 0V, V_{OUT} = ±2V			300			Ω
Transmitter Output Short-Circuit Current					±10		mA

Typical Operating Characteristics

MAX223/MAX230–MAX241

TRANSMITTER OUTPUT VOLTAGE (V_{OH}) vs. V_{CC}

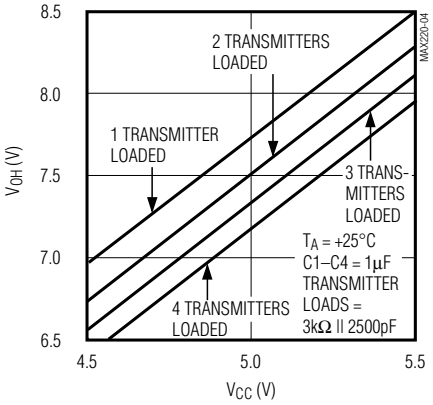

TRANSMITTER OUTPUT VOLTAGE (V_{OH}) vs. LOAD CAPACITANCE AT DIFFERENT DATA RATES

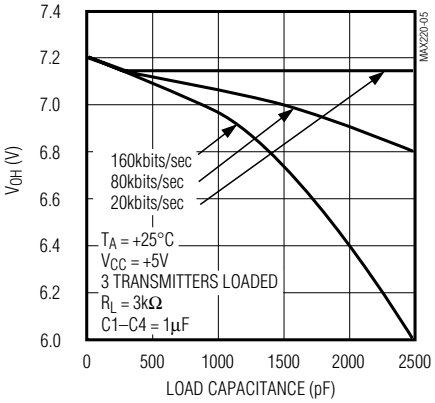

TRANSMITTER SLEW RATE vs. LOAD CAPACITANCE

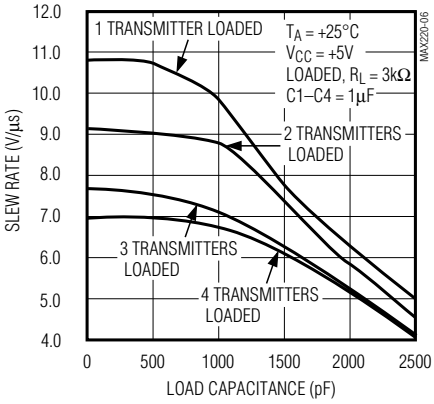

TRANSMITTER OUTPUT VOLTAGE (V_{OL}) vs. V_{CC}

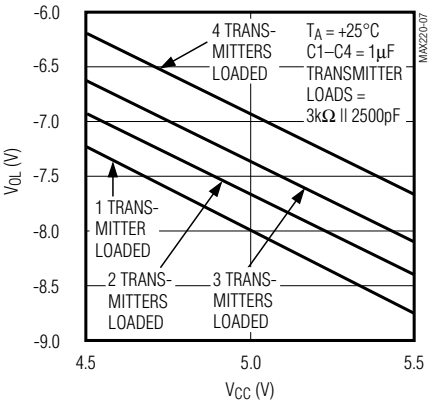

TRANSMITTER OUTPUT VOLTAGE (V_{OL}) vs. LOAD CAPACITANCE AT DIFFERENT DATA RATES

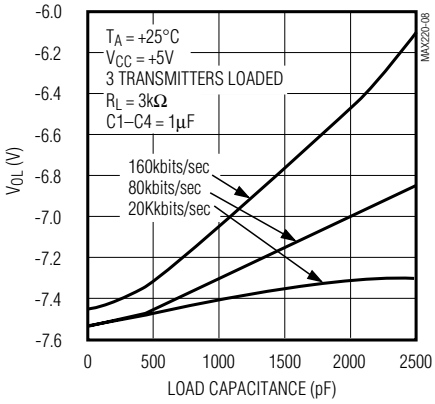

TRANSMITTER OUTPUT VOLTAGE (V+, V-) vs. LOAD CURRENT

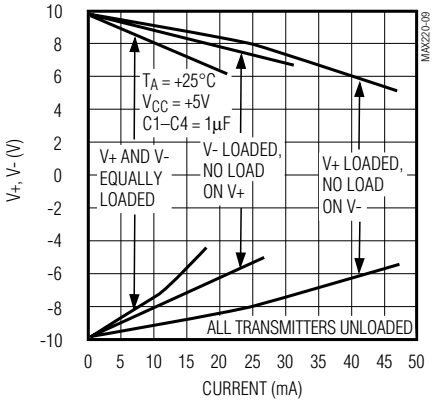

V+, V- WHEN EXITING SHUTDOWN (1µF CAPACITORS)

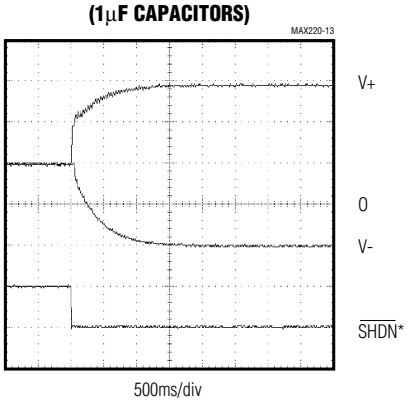

*SHUTDOWN POLARITY IS REVERSED FOR NON MAX241 PARTS

+5V-Powered, Multichannel RS-232 Drivers/Receivers

ABSOLUTE MAXIMUM RATINGS—MAX225/MAX244–MAX249

Supply Voltage (V_{CC}) .....-0.3V to +6V
Input Voltages
T_{IN}, $\overline{ENA}$, $\overline{ENB}$, $\overline{ENR}$, $\overline{ENT}$, $\overline{ENRA}$, $\overline{ENRB}$, $\overline{ENTA}$, $\overline{ENTB}$.....-0.3V to (V_{CC} + 0.3V)
R_{IN} .....±25V
T_{OUT} (Note 5).....±15V
R_{OUT} .....-0.3V to (V_{CC} + 0.3V)
Short Circuit (one output at a time)
T_{OUT} to GND .....Continuous
R_{OUT} to GND.....Continuous

Continuous Power Dissipation (T_A = +70°C)
28-Pin Wide SO (derate 12.50mW/°C above +70°C) 1W
40-Pin Plastic DIP (derate 11.11mW/°C above +70°C) ...611mW
44-Pin PLCC (derate 13.33mW/°C above +70°C) 1.07W
Operating Temperature Ranges
MAX225C_ _, MAX24_C_ _ .....0°C to +70°C
MAX225E_ _, MAX24_E_ _ .....-40°C to +85°C
Storage Temperature Range .....-65°C to +160°C
Lead Temperature (soldering,10s) (Note 6) .....+300°C

Note 5: Input voltage measured with transmitter output in a high-impedance state, shutdown, or V_{CC} = 0V.
Note 6: Maximum reflow temperature for the MAX225/MAX245/MAX246/MAX247 is +225°C.

Stresses beyond those listed under "Absolute Maximum Ratings" may cause permanent damage to the device. These are stress ratings only, and functional operation of the device at these or any other conditions beyond those indicated in the operational sections of the specifications is not implied. Exposure to absolute maximum rating conditions for extended periods may affect device reliability.

ELECTRICAL CHARACTERISTICS—MAX225/MAX244–MAX249

(MAX225, V_{CC} = 5.0V ±5%; MAX244–MAX249, V_{CC} = +5.0V ±10%, external capacitors C1–C4 = 1µF; T_A = T_{MIN} to T_{MAX}; unless otherwise noted.)

PARAMETER	CONDITIONS		MIN	TYP	MAX	UNITS
RS-232 TRANSMITTERS						
Input Logic Threshold Low				1.4	0.8	V
Input Logic Threshold High			2	1.4		V
Logic Pull-Up/Input Current	Tables 1a–1d	Normal operation		10	50	µA
		Shutdown		±0.01	±1	
Data Rate	Tables 1a–1d, normal operation			120	64	kbps
Output Voltage Swing	All transmitter outputs loaded with 3kΩ to GND		±5	±7.5		V
Output Leakage Current (Shutdown)	Tables 1a–1d	$\overline{ENA}$, $\overline{ENB}$, $\overline{ENT}$, $\overline{ENTA}$, $\overline{ENTB}$ = V_{CC}, V_{OUT} = ±15V		±0.01	±25	µA
		V_{CC} = 0V, V_{OUT} = ±15V		±0.01	±25	
Transmitter Output Resistance	V_{CC} = V+ = V- = 0V, V_{OUT} = ±2V (Note 7)		300	10M		Ω
Output Short-Circuit Current	V_{OUT} = 0V		±7	±30		mA
RS-232 RECEIVERS						
RS-232 Input Voltage Operating Range					±25	V
RS-232 Input Threshold Low	V_{CC} = 5V		0.8	1.3		V
RS-232 Input Threshold High	V_{CC} = 5V			1.8	2.4	V
RS-232 Input Hysteresis	V_{CC} = 5V		0.2	0.5	1.0	V
RS-232 Input Resistance			3	5	7	kΩ
TTL/CMOS Output Voltage Low	I_{OUT} = 3.2mA			0.2	0.4	V
TTL/CMOS Output Voltage High	I_{OUT} = -1.0mA		3.5	V_{CC} - 0.2		V
TTL/CMOS Output Short-Circuit Current	Sourcing V_{OUT} = GND		-2	-10		mA
	Shrinking V_{OUT} = V_{CC}		10	30		
TTL/CMOS Output Leakage Current	Normal operation, outputs disabled, Tables 1a–1d, 0V ≤ V_{OUT} ≤ V_{CC}, $\overline{ENR_}$ = V_{CC}			±0.05	±0.10	µA

ELECTRICAL CHARACTERISTICS—MAX225/MAX244–MAX249 (continued)

(MAX225, V_{CC} = 5.0V ±5%; MAX244–MAX249, V_{CC} = +5.0V ±10%, external capacitors C1–C4 = 1µF; T_A = T_{MIN} to T_{MAX}; unless otherwise noted.)

PARAMETER	CONDITIONS		MIN	TYP	MAX	UNITS
POWER SUPPLY AND CONTROL LOGIC						
Operating Supply Voltage		MAX225	4.75		5.25	V
		MAX244–MAX249	4.5		5.5	
V_{CC} Supply Current (Normal Operation)	No load	MAX225		10	20	mA
		MAX244–MAX249		11	30	
	3kΩ loads on all outputs	MAX225		40		
		MAX244–MAX249		57		
Shutdown Supply Current	T_A = +25°C			8	25	µA
	T_A = T_{MIN} to T_{MAX}				50	
Control Input	Leakage current				±1	µA
	Threshold low			1.4	0.8	V
	Threshold high		2.4	1.4		
AC CHARACTERISTICS						
Transition Slew Rate	C_L = 50pF to 2500pF, R_L = 3kΩ to 7kΩ, V_{CC} = 5V, T_A = +25°C, measured from +3V to -3V or -3V to +3V		5	10	30	V/µs
Transmitter Propagation Delay TLL to RS-232 (Normal Operation), Figure 1	t_{PHLT}			1.3	3.5	µs
	t_{PLHT}			1.5	3.5	
Receiver Propagation Delay TLL to RS-232 (Normal Operation), Figure 2	t_{PHLR}			0.6	1.5	µs
	t_{PLHR}			0.6	1.5	
Receiver Propagation Delay TLL to RS-232 (Low-Power Mode), Figure 2	t_{PHLS}			0.6	10	µs
	t_{PLHS}			3.0	10	
Transmitter + to - Propagation Delay Difference (Normal Operation)	t_{PHLT} - t_{PLHT}			350		ns
Receiver + to - Propagation Delay Difference (Normal Operation)	t_{PHLR} - t_{PLHR}			350		ns
Receiver-Output Enable Time, Figure 3	t_{ER}			100	500	ns
Receiver-Output Disable Time, Figure 3	t_{DR}			100	500	ns
Transmitter Enable Time	t_{ET}	MAX246–MAX249 (excludes charge-pump startup)		5		µs
		MAX225/MAX245–MAX249 (includes charge-pump startup)		10		ms
Transmitter Disable Time, Figure 4	t_{DT}			100		ns

Note 7: The 300Ω minimum specification complies with EIA/TIA-232E, but the actual resistance when in shutdown mode or V_{CC} = 0V is 10MΩ as is implied by the leakage specification.

+5V-Powered, Multichannel RS-232 Drivers/Receivers

Typical Operating Characteristics

MAX225/MAX244–MAX249

TRANSMITTER SLEW RATE vs. LOAD CAPACITANCE

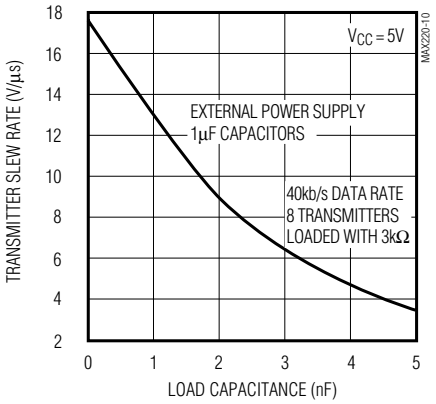

OUTPUT VOLTAGE vs. LOAD CURRENT FOR V+ AND V-

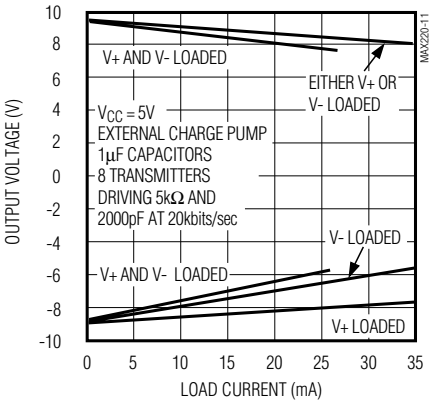

TRANSMITTER OUTPUT VOLTAGE (V+, V-) vs. LOAD CAPACITANCE AT DIFFERENT DATA RATES

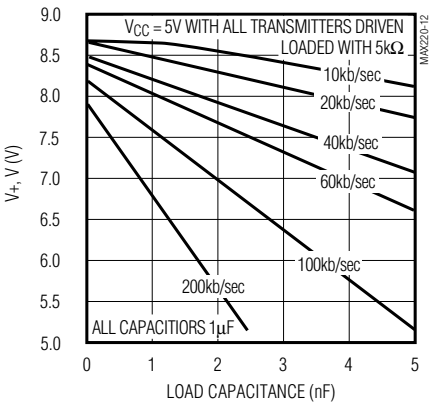

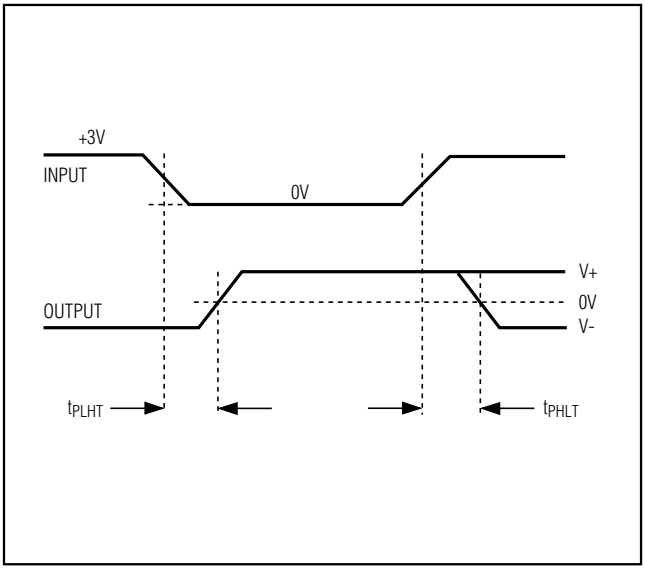

Figure 1. Transmitter Propagation-Delay Timing

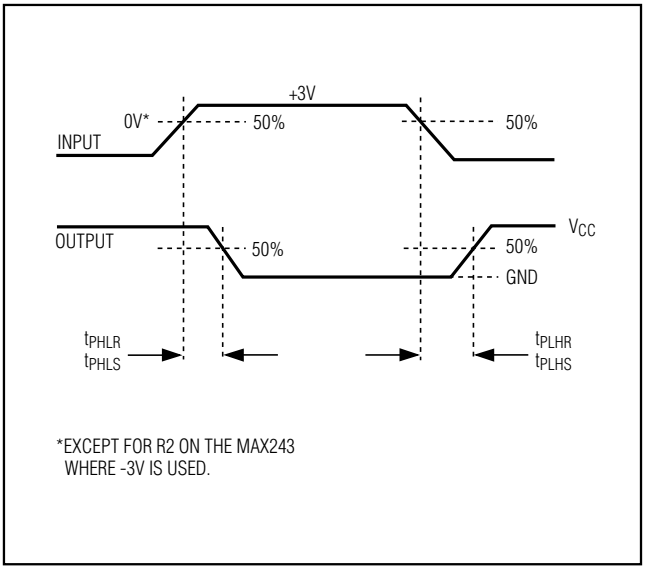

Figure 2. Receiver Propagation-Delay Timing

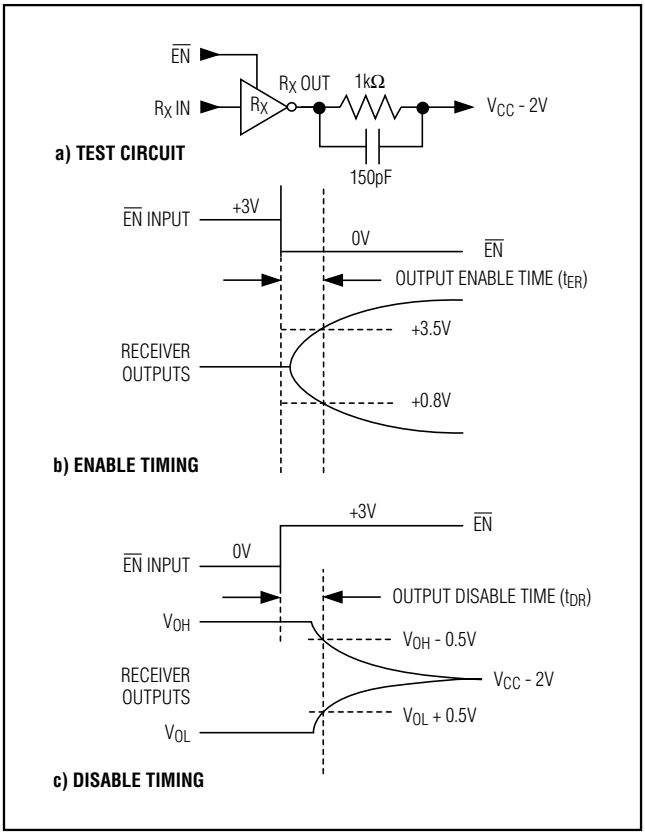

Figure 3. Receiver-Output Enable and Disable Timing

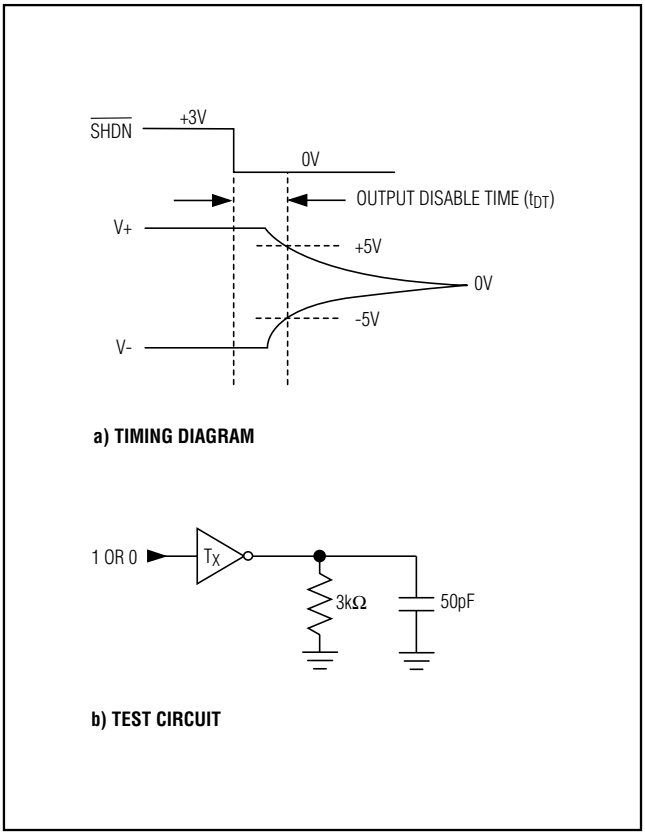

Figure 4. Transmitter-Output Disable Timing

+5V-Powered, Multichannel RS-232 Drivers/Receivers

Table 1a. MAX245 Control Pin Configurations

$\overline{ENT}$	$\overline{ENR}$	OPERATION STATUS	TRANSMITTERS	RECEIVERS
0	0	Normal Operation	All Active	All Active
0	1	Normal Operation	All Active	All 3-State
1	0	Shutdown	All 3-State	All Low-Power Receive Mode
1	1	Shutdown	All 3-State	All 3-State

Table 1b. MAX245 Control Pin Configurations

$\overline{ENT}$	$\overline{ENR}$	OPERATION STATUS	TRANSMITTERS		RECEIVERS	
			TA1–TA4	TB1–TB4	RA1–RA5	RB1–RB5
0	0	Normal Operation	All Active	All Active	All Active	All Active
0	1	Normal Operation	All Active	All Active	RA1–RA4 3-State, RA5 Active	RB1–RB4 3-State, RB5 Active
1	0	Shutdown	All 3-State	All 3-State	All Low-Power Receive Mode	All Low-Power Receive Mode
1	1	Shutdown	All 3-State	All 3-State	RA1–RA4 3-State, RA5 Low-Power Receive Mode	RB1–RB4 3-State, RB5 Low-Power Receive Mode

Table 1c. MAX246 Control Pin Configurations

$\overline{ENA}$	$\overline{ENB}$	OPERATION STATUS	TRANSMITTERS		RECEIVERS	
			TA1–TA4	TB1–TB4	RA1–RA5	RB1–RB5
0	0	Normal Operation	All Active	All Active	All Active	All Active
0	1	Normal Operation	All Active	All 3-State	All Active	RB1–RB4 3-State, RB5 Active
1	0	Shutdown	All 3-State	All Active	RA1–RA4 3-State, RA5 Active	All Active
1	1	Shutdown	All 3-State	All 3-State	RA1–RA4 3-State, RA5 Low-Power Receive Mode	RB1–RB4 3-State, RA5 Low-Power Receive Mode

Table 1d. MAX247/MAX248/MAX249 Control Pin Configurations

$\overline{ENTA}$	$\overline{ENTB}$	$\overline{ENRA}$	$\overline{ENRB}$	OPERATION STATUS		TRANSMITTERS		RECEIVERS	
					MAX247	TA1–TA4	TB1–TB4	RA1–RA4	RB1–RB5
					MAX248	TA1–TA4	TB1–TB4	RA1–RA4	RB1–RB4
					MAX249	TA1–TA3	TB1–TB3	RA1–RA5	RB1–RB5
0	0	0	0	Normal Operation		All Active	All Active	All Active	All Active
0	0	0	1	Normal Operation		All Active	All Active	All Active	All 3-State, except RB5 stays active on MAX247
0	0	1	0	Normal Operation		All Active	All Active	All 3-State	All Active
0	0	1	1	Normal Operation		All Active	All Active	All 3-State	All 3-State, except RB5 stays active on MAX247
0	1	0	0	Normal Operation		All Active	All 3-State	All Active	All Active
0	1	0	1	Normal Operation		All Active	All 3-State	All Active	All 3-State, except RB5 stays active on MAX247
0	1	1	0	Normal Operation		All Active	All 3-State	All 3-State	All Active
0	1	1	1	Normal Operation		All Active	All 3-State	All 3-State	All 3-State, except RB5 stays active on MAX247
1	0	0	0	Normal Operation		All 3-State	All Active	All Active	All Active
1	0	0	1	Normal Operation		All 3-State	All Active	All Active	All 3-State, except RB5 stays active on MAX247
1	0	1	0	Normal Operation		All 3-State	All Active	All 3-State	All Active
1	0	1	1	Normal Operation		All 3-State	All Active	All 3-State	All 3-State, except RB5 stays active on MAX247
1	1	0	0	Shutdown		All 3-State	All 3-State	Low-Power Receive Mode	Low-Power Receive Mode
1	1	0	1	Shutdown		All 3-State	All 3-State	Low-Power Receive Mode	All 3-State, except RB5 stays active on MAX247
1	1	1	0	Shutdown		All 3-State	All 3-State	All 3-State	Low-Power Receive Mode
1	1	1	1	Shutdown		All 3-State	All 3-State	All 3-State	All 3-State, except RB5 stays active on MAX247

+5V-Powered, Multichannel RS-232 Drivers/Receivers

Detailed Description

The MAX220–MAX249 contain four sections: dual charge-pump DC-DC voltage converters, RS-232 drivers, RS-232 receivers, and receiver and transmitter enable control inputs.

Dual Charge-Pump Voltage Converter

The MAX220–MAX249 have two internal charge-pumps that convert +5V to ±10V (unloaded) for RS-232 driver operation. The first converter uses capacitor C1 to double the +5V input to +10V on C3 at the V+ output. The second converter uses capacitor C2 to invert +10V to -10V on C4 at the V- output.

A small amount of power may be drawn from the +10V (V+) and -10V (V-) outputs to power external circuitry (see the *Typical Operating Characteristics* section), except on the MAX225 and MAX245–MAX247, where these pins are not available. V+ and V- are not regulated, so the output voltage drops with increasing load current. Do not load V+ and V- to a point that violates the minimum ±5V EIA/TIA-232E driver output voltage when sourcing current from V+ and V- to external circuitry.

When using the shutdown feature in the MAX222, MAX225, MAX230, MAX235, MAX236, MAX240, MAX241, and MAX245–MAX249, avoid using V+ and V- to power external circuitry. When these parts are shut down, V- falls to 0V, and V+ falls to +5V. For applications where a +10V external supply is applied to the V+ pin (instead of using the internal charge pump to generate +10V), the C1 capacitor must not be installed and the $\overline{SHDN}$ pin must be tied to V_{CC}. This is because V+ is internally connected to V_{CC} in shutdown mode.

RS-232 Drivers

The typical driver output voltage swing is ±8V when loaded with a nominal 5kΩ RS-232 receiver and V_{CC} = +5V. Output swing is guaranteed to meet the EIA/TIA-232E and V.28 specification, which calls for ±5V minimum driver output levels under worst-case conditions. These include a minimum 3kΩ load, V_{CC} = +4.5V, and maximum operating temperature. Unloaded driver output voltage ranges from (V+ -1.3V) to (V- +0.5V).

Input thresholds are both TTL and CMOS compatible. The inputs of unused drivers can be left unconnected since 400kΩ input pull-up resistors to V_{CC} are built in (except for the MAX220). The pull-up resistors force the outputs of unused drivers low because all drivers invert. The internal input pull-up resistors typically source 12µA, except in shutdown mode where the pull-ups are disabled. Driver outputs turn off and enter a high-impedance state—where leakage current is typically microamperes (maximum 25µA)—when in shutdown mode, in three-state mode, or when device power is removed. Outputs can be driven to ±15V. The power-supply current typically drops to 8µA in shutdown mode. The MAX220 does not have pull-up resistors to force the outputs of the unused drivers low. Connect unused inputs to GND or V_{CC}.

The MAX239 has a receiver three-state control line, and the MAX223, MAX225, MAX235, MAX236, MAX240, and MAX241 have both a receiver three-state control line and a low-power shutdown control. Table 2 shows the effects of the shutdown control and receiver three-state control on the receiver outputs.

The receiver TTL/CMOS outputs are in a high-impedance, three-state mode whenever the three-state enable line is high (for the MAX225/MAX235/MAX236/MAX239–MAX241), and are also high-impedance whenever the shutdown control line is high.

When in low-power shutdown mode, the driver outputs are turned off and their leakage current is less than 1µA with the driver output pulled to ground. The driver output leakage remains less than 1µA, even if the transmitter output is backdriven between 0V and (V_{CC} + 6V). Below -0.5V, the transmitter is diode clamped to ground with 1kΩ series impedance. The transmitter is also zener clamped to approximately V_{CC} + 6V, with a series impedance of 1kΩ.

The driver output slew rate is limited to less than 30V/µs as required by the EIA/TIA-232E and V.28 specifications. Typical slew rates are 24V/µs unloaded and 10V/µs loaded with 3Ω and 2500pF.

RS-232 Receivers

EIA/TIA-232E and V.28 specifications define a voltage level greater than 3V as a logic 0, so all receivers invert. Input thresholds are set at 0.8V and 2.4V, so receivers respond to TTL level inputs as well as EIA/TIA-232E and V.28 levels.

The receiver inputs withstand an input overvoltage up to ±25V and provide input terminating resistors with

Table 2. Three-State Control of Receivers

PART	SHDN	$\overline{SHDN}$	EN	$\overline{EN(R)}$	RECEIVERS
MAX223	—	Low High High	X Low High	—	High Impedance Active High Impedance
MAX225	—	—	—	Low High	High Impedance Active
MAX235 MAX236 MAX240	Low Low High	—	—	Low High X	High Impedance Active High Impedance

nominal 5kΩ values. The receivers implement Type 1 interpretation of the fault conditions of V.28 and EIA/TIA-232E.

The receiver input hysteresis is typically 0.5V with a guaranteed minimum of 0.2V. This produces clear output transitions with slow-moving input signals, even with moderate amounts of noise and ringing. The receiver propagation delay is typically 600ns and is independent of input swing direction.

Low-Power Receive Mode

The low-power receive-mode feature of the MAX223, MAX242, and MAX245–MAX249 puts the IC into shutdown mode but still allows it to receive information. This is important for applications where systems are periodically awakened to look for activity. Using low-power receive mode, the system can still receive a signal that will activate it on command and prepare it for communication at faster data rates. This operation conserves system power.

Negative Threshold—MAX243

The MAX243 is pin compatible with the MAX232A, differing only in that RS-232 cable fault protection is removed on one of the two receiver inputs. This means that control lines such as CTS and RTS can either be driven or left floating without interrupting communication. Different cables are not needed to interface with different pieces of equipment.

The input threshold of the receiver without cable fault protection is -0.8V rather than +1.4V. Its output goes positive only if the input is connected to a control line that is actively driven negative. If not driven, it defaults to the 0 or "OK to send" state. Normally, the MAX243's other receiver (+1.4V threshold) is used for the data line (TD or RD), while the negative threshold receiver is connected to the control line (DTR, DTS, CTS, RTS, etc.).

Other members of the RS-232 family implement the optional cable fault protection as specified by EIA/TIA-232E specifications. This means a receiver output goes high whenever its input is driven negative, left floating, or shorted to ground. The high output tells the serial communications IC to stop sending data. To avoid this, the control lines must either be driven or connected with jumpers to an appropriate positive voltage level.

Shutdown—MAX222–MAX242

On the MAX222, MAX235, MAX236, MAX240, and MAX241, all receivers are disabled during shutdown. On the MAX223 and MAX242, two receivers continue to operate in a reduced power mode when the chip is in shutdown. Under these conditions, the propagation delay increases to about 2.5µs for a high-to-low input transition. When in shutdown, the receiver acts as a CMOS inverter with no hysteresis. The MAX223 and MAX242 also have a receiver output enable input ($\overline{EN}$ for the MAX242 and EN for the MAX223) that allows receiver output control independent of $\overline{SHDN}$ (SHDN for MAX241). With all other devices, $\overline{SHDN}$ (SHDN for MAX241) also disables the receiver outputs.

The MAX225 provides five transmitters and five receivers, while the MAX245 provides ten receivers and eight transmitters. Both devices have separate receiver and transmitter-enable controls. The charge pumps turn off and the devices shut down when a logic high is applied to the ENT input. In this state, the supply current drops to less than 25µA and the receivers continue to operate in a low-power receive mode. Driver outputs enter a high-impedance state (three-state mode). On the MAX225, all five receivers are controlled by the $\overline{ENR}$ input. On the MAX245, eight of the receiver outputs are controlled by the $\overline{ENR}$ input, while the remaining two receivers (RA5 and RB5) are always active. RA1–RA4 and RB1–RB4 are put in a three-state mode when $\overline{ENR}$ is a logic high.

Receiver and Transmitter Enable Control Inputs

The MAX225 and MAX245–MAX249 feature transmitter and receiver enable controls.

The receivers have three modes of operation: full-speed receive (normal active), three-state (disabled), and low-power receive (enabled receivers continue to function at lower data rates). The receiver enable inputs control the full-speed receive and three-state modes. The transmitters have two modes of operation: full-speed transmit (normal active) and three-state (disabled). The transmitter enable inputs also control the shutdown mode. The device enters shutdown mode when all transmitters are disabled. Enabled receivers function in the low-power receive mode when in shutdown.

Tables 1a–1d define the control states. The MAX244 has no control pins and is not included in these tables.

The MAX246 has ten receivers and eight drivers with two control pins, each controlling one side of the device. A logic high at the A-side control input ($\overline{ENA}$) causes the four A-side receivers and drivers to go into a three-state mode. Similarly, the B-side control input ($\overline{ENB}$) causes the four B-side drivers and receivers to go into a three-state mode. As in the MAX245, one A-side and one B-side receiver (RA5 and RB5) remain active at all times. The entire device is put into shutdown mode when both the A and B sides are disabled ($\overline{ENA}$ = $\overline{ENB}$ = +5V).

The MAX247 provides nine receivers and eight drivers with four control pins. The $\overline{ENRA}$ and $\overline{ENRB}$ receiver enable inputs each control four receiver outputs. The $\overline{ENTA}$ and $\overline{ENTB}$ transmitter enable inputs each control four drivers. The ninth receiver (RB5) is always active. The device enters shutdown mode with a logic high on both $\overline{ENTA}$ and $\overline{ENTB}$.

The MAX248 provides eight receivers and eight drivers with four control pins. The $\overline{ENRA}$ and $\overline{ENRB}$ receiver enable inputs each control four receiver outputs. The $\overline{ENTA}$ and $\overline{ENTB}$ transmitter enable inputs control four drivers each. This part does not have an always-active receiver. The device enters shutdown mode and transmitters go into a three-state mode with a logic high on both $\overline{ENTA}$ and $\overline{ENTB}$.

The MAX249 provides ten receivers and six drivers with four control pins. The $\overline{ENRA}$ and $\overline{ENRB}$ receiver enable inputs each control five receiver outputs. The $\overline{ENTA}$ and $\overline{ENTB}$ transmitter enable inputs control three drivers each. There is no always-active receiver. The device enters shutdown mode and transmitters go into a three-state mode with a logic high on both $\overline{ENTA}$ and $\overline{ENTB}$. In shutdown mode, active receivers operate in a low-power receive mode at data rates up to 20kb/s.

Applications Information

Figures 5 through 25 show pin configurations and typical operating circuits. In applications that are sensitive to power-supply noise, V_{CC} should be decoupled to ground with a capacitor of the same value as C1 and C2 connected as close as possible to the device.

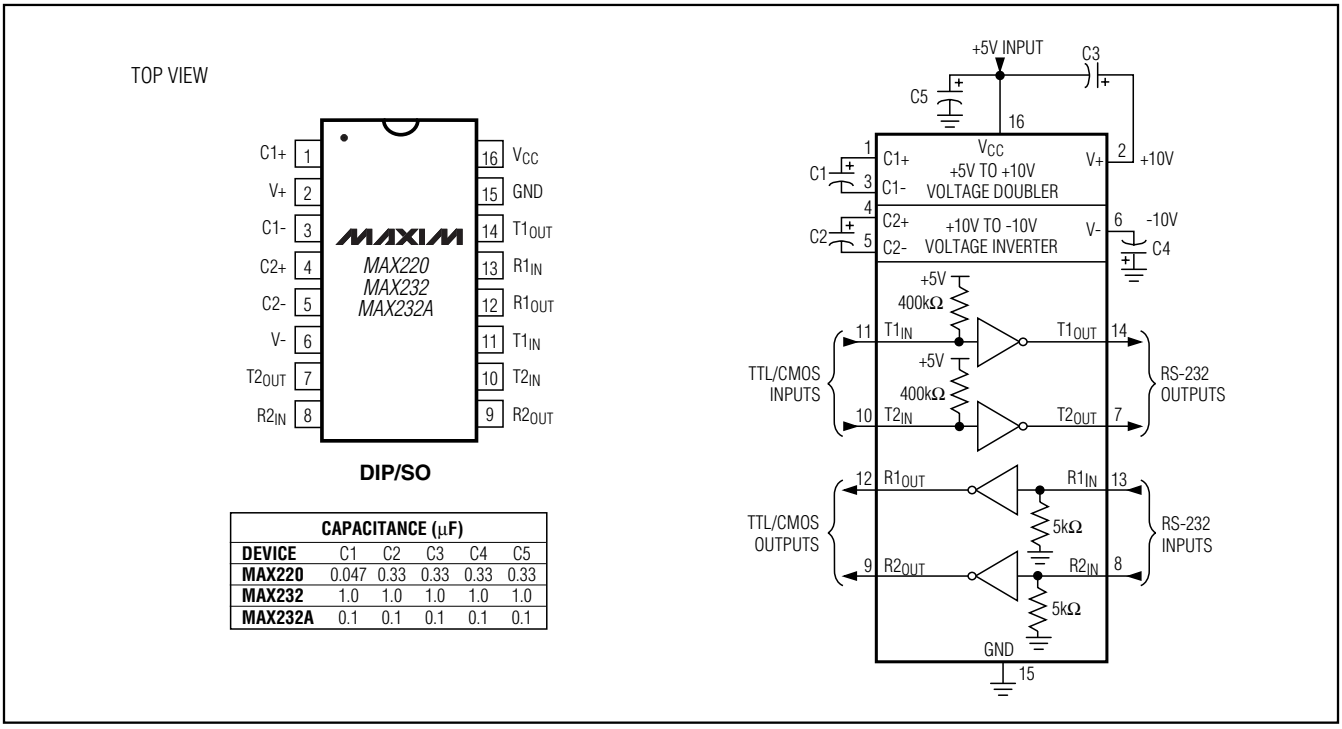

CAPACITANCE (µF)					
DEVICE	C1	C2	C3	C4	C5
MAX220	0.047	0.33	0.33	0.33	0.33
MAX232	1.0	1.0	1.0	1.0	1.0
MAX232A	0.1	0.1	0.1	0.1	0.1

Figure 5. MAX220/MAX232/MAX232A Pin Configuration and Typical Operating Circuit

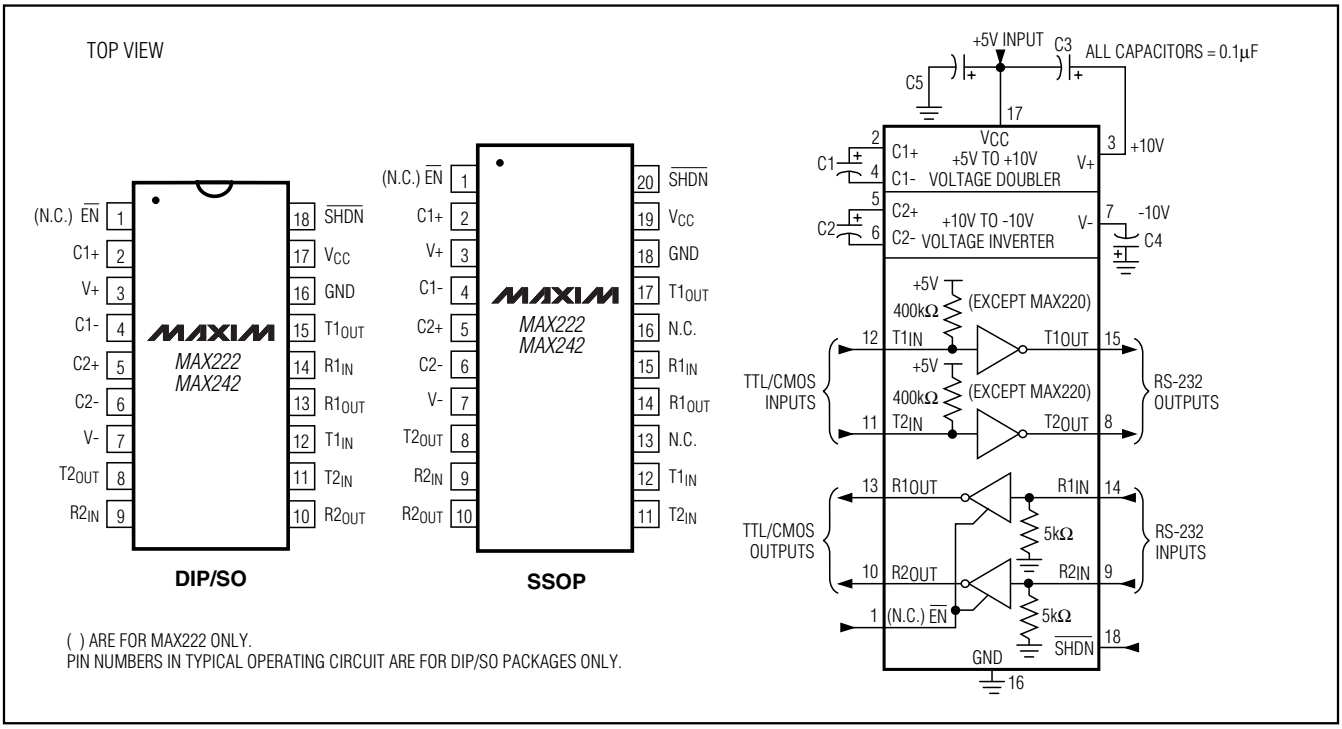

Figure 6. MAX222/MAX242 Pin Configurations and Typical Operating Circuit

+5V-Powered, Multichannel RS-232 Drivers/Receivers

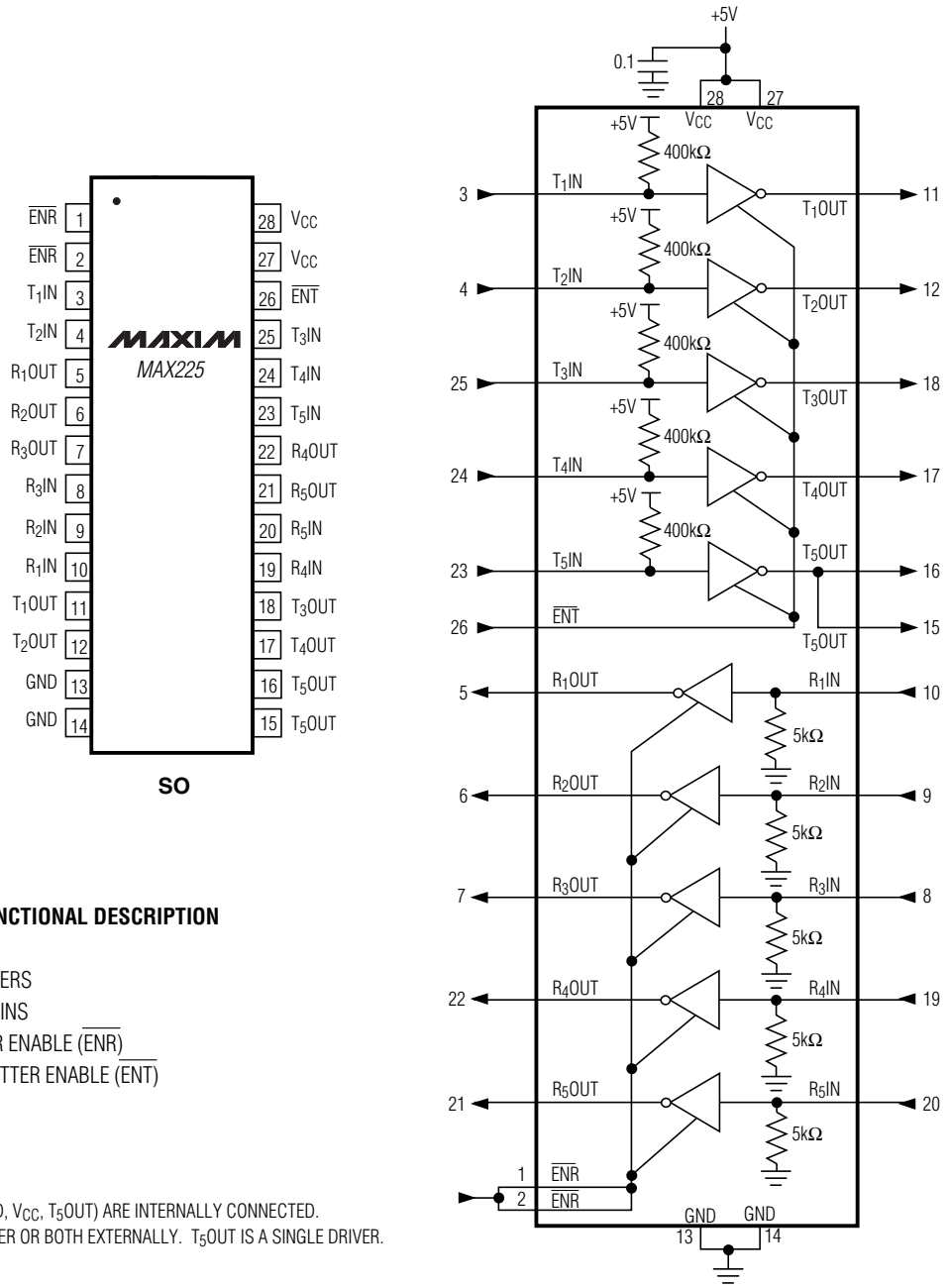

MAX225 FUNCTIONAL DESCRIPTION

5 RECEIVERS

5 TRANSMITTERS

2 CONTROL PINS

1 RECEIVER ENABLE ($\overline{ENR}$)

1 TRANSMITTER ENABLE ($\overline{ENT}$)

PINS ($\overline{ENR}$, GND, V_{CC}, T_5OUT) ARE INTERNALLY CONNECTED. CONNECT EITHER OR BOTH EXTERNALLY. T_5OUT IS A SINGLE DRIVER.

Figure 7. MAX225 Pin Configuration and Typical Operating Circuit

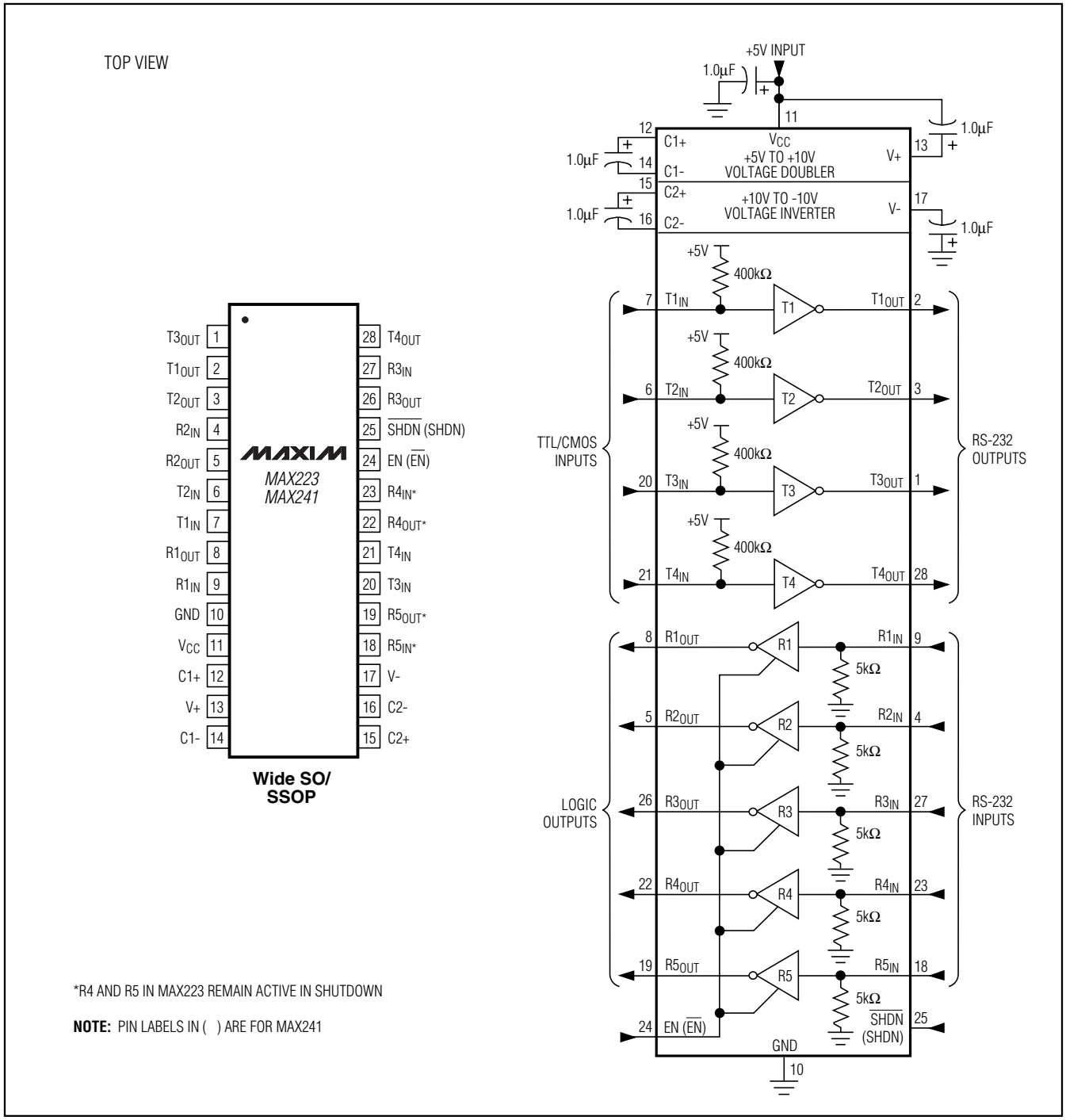

Figure 8. MAX223/MAX241 Pin Configuration and Typical Operating Circuit

+5V-Powered, Multichannel RS-232 Drivers/Receivers

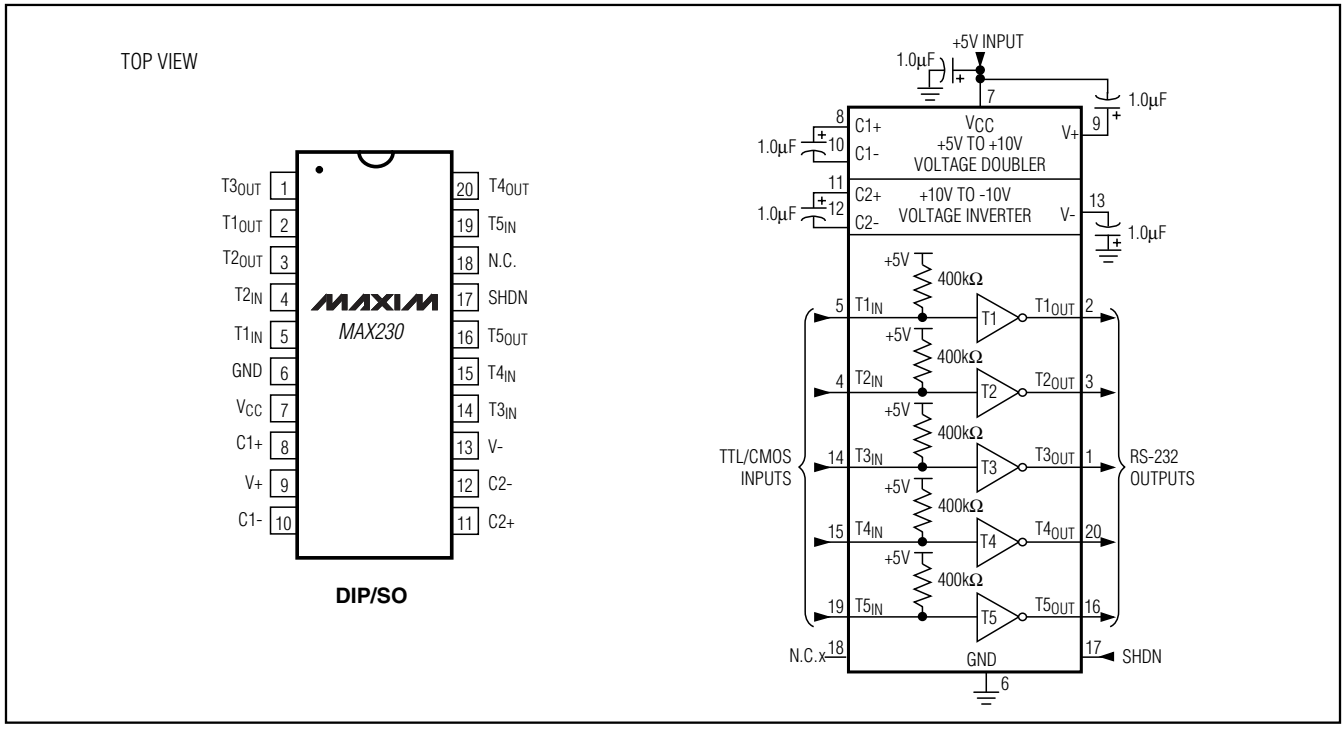

Figure 9. MAX230 Pin Configuration and Typical Operating Circuit

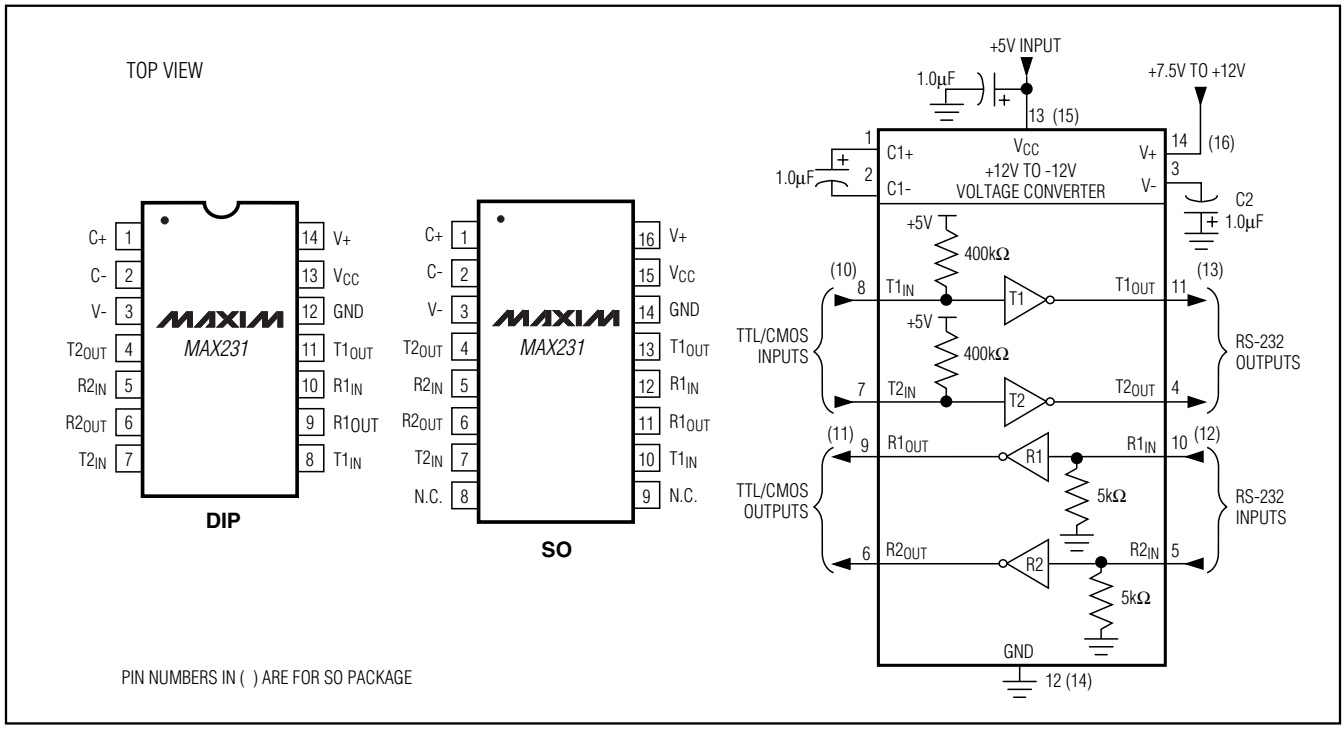

Figure 10. MAX231 Pin Configurations and Typical Operating Circuit

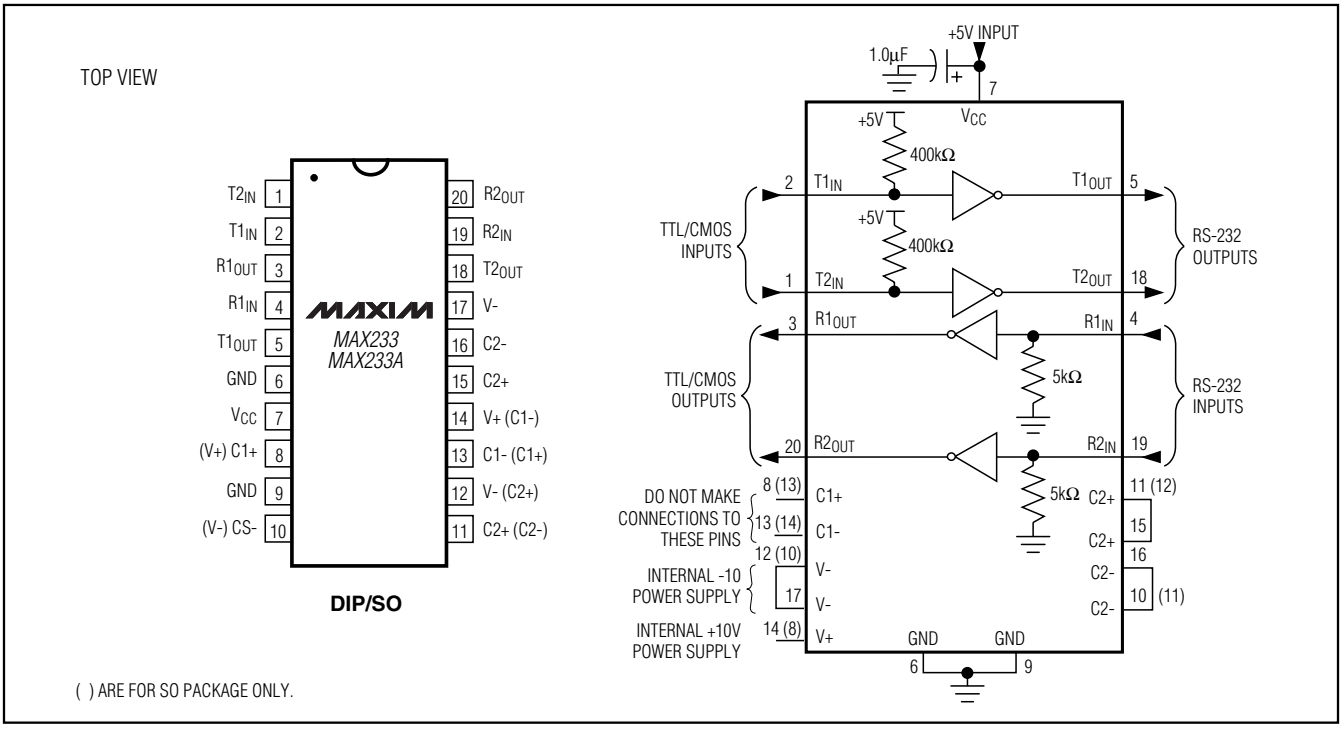

Figure 11. MAX233/MAX233A Pin Configuration and Typical Operating Circuit

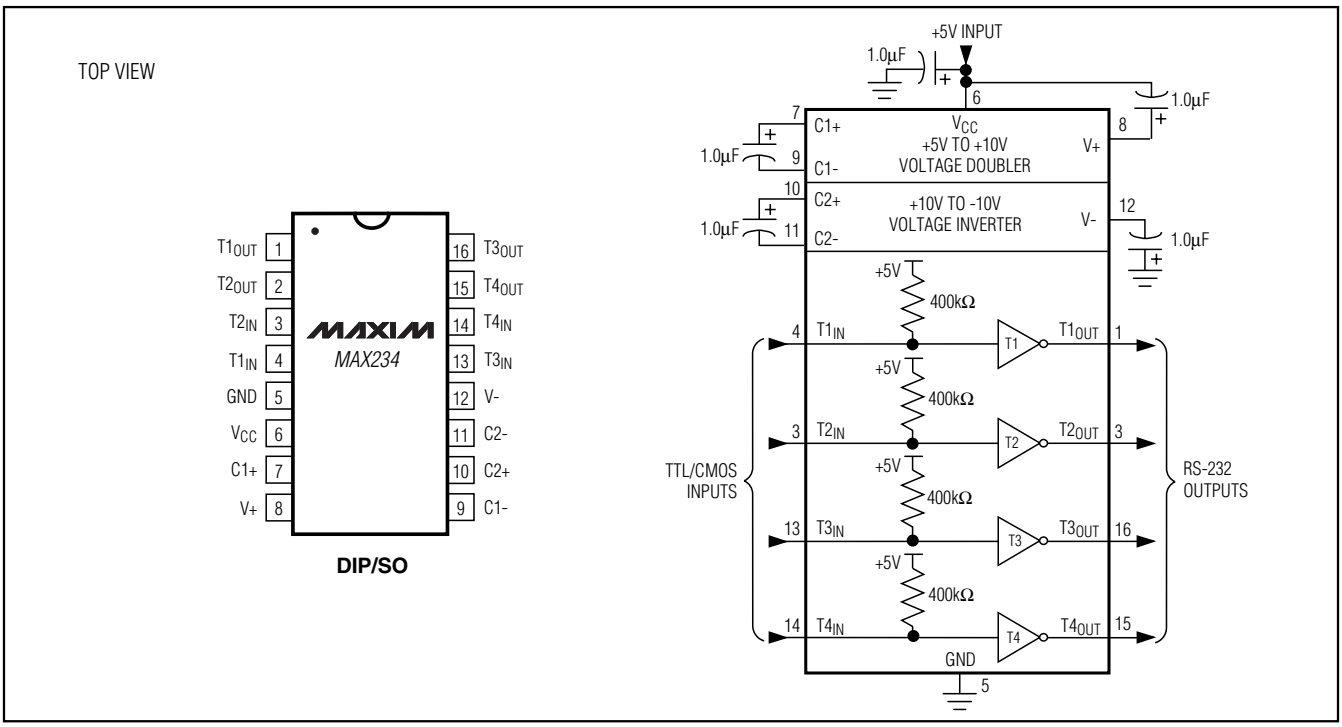

Figure 12. MAX234 Pin Configuration and Typical Operating Circuit

+5V-Powered, Multichannel RS-232 Drivers/Receivers

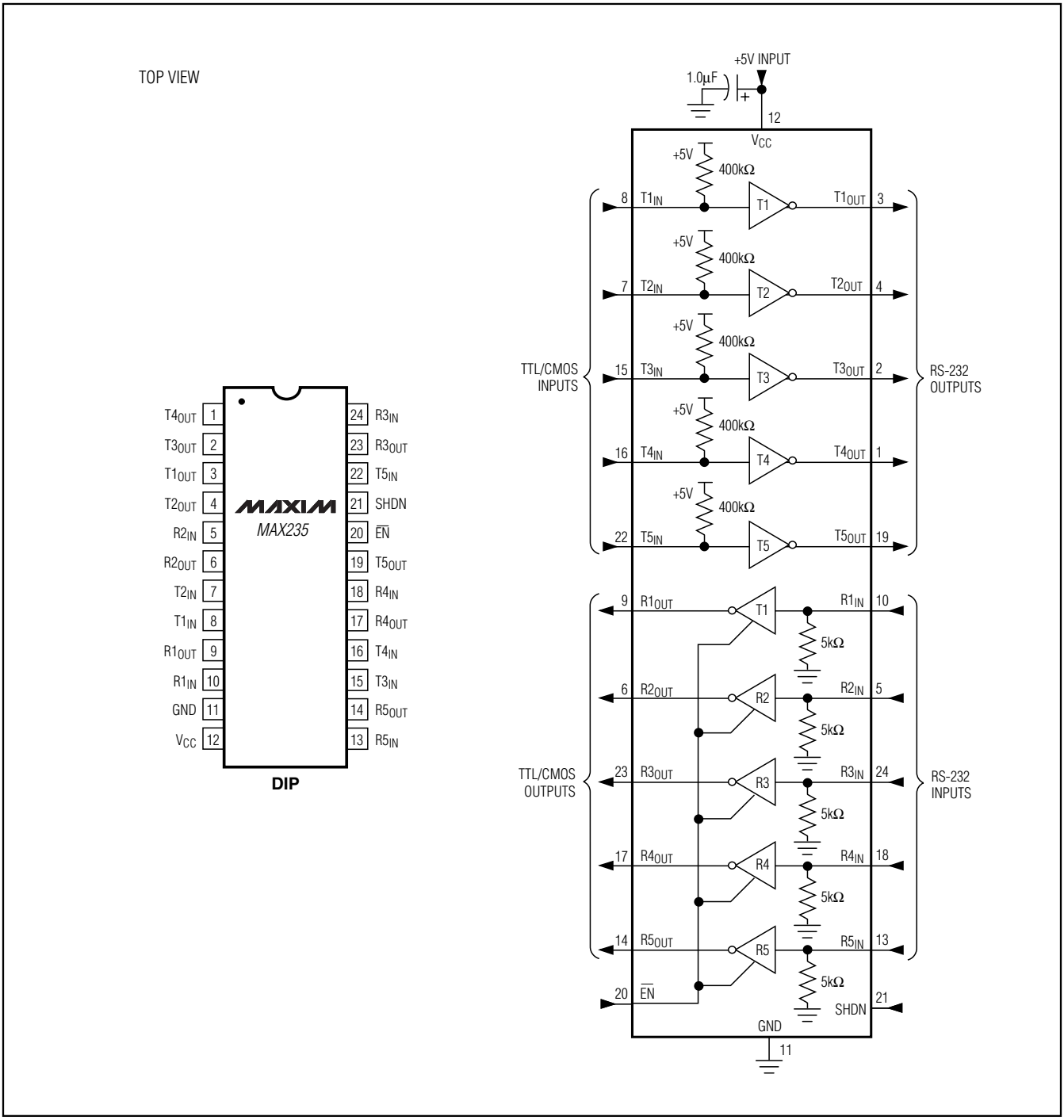

Figure 13. MAX235 Pin Configuration and Typical Operating Circuit

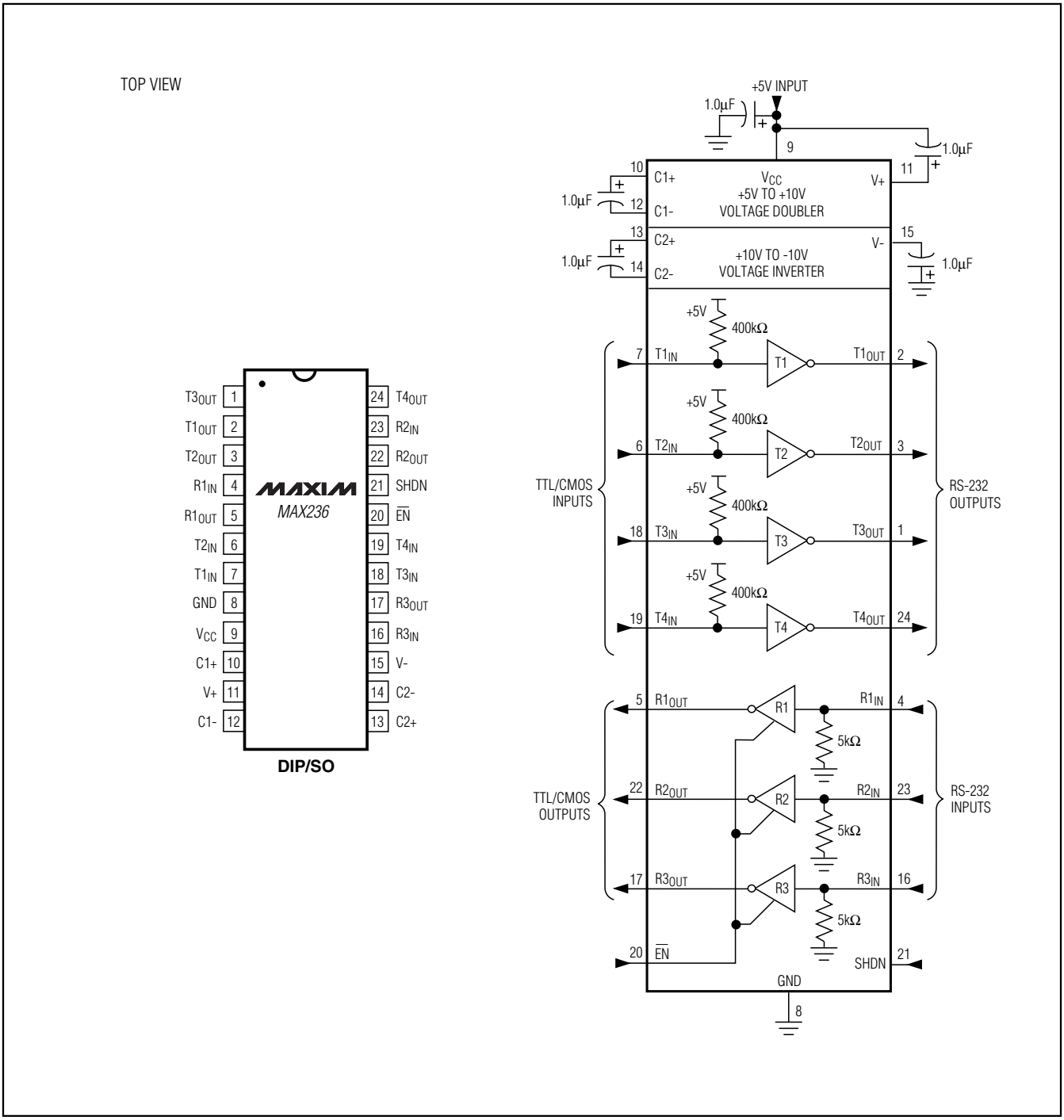

Figure 14. MAX236 Pin Configuration and Typical Operating Circuit

+5V-Powered, Multichannel RS-232 Drivers/Receivers

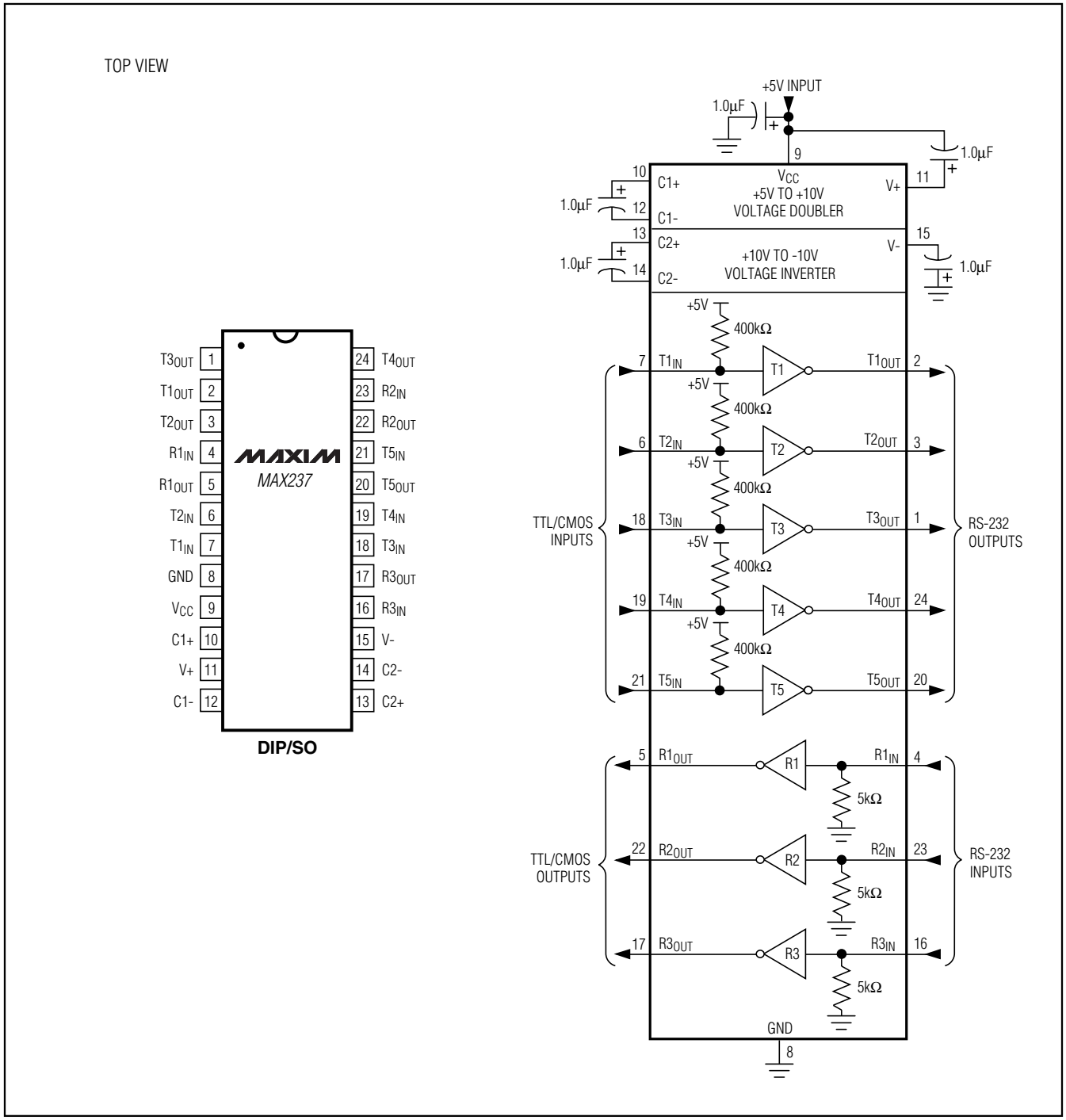

Figure 15. MAX237 Pin Configuration and Typical Operating Circuit

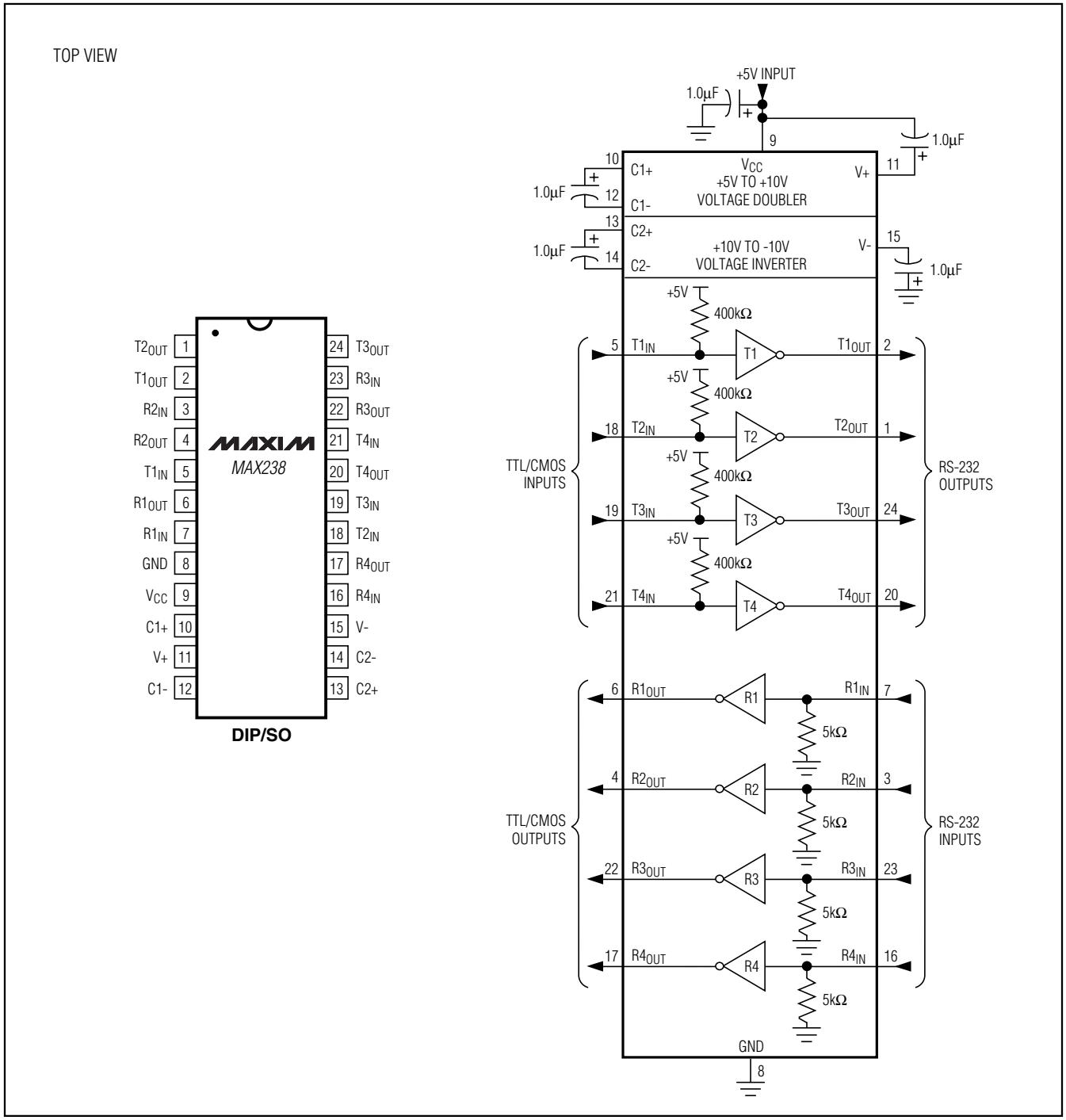

Figure 16. MAX238 Pin Configuration and Typical Operating Circuit

+5V-Powered, Multichannel RS-232 Drivers/Receivers

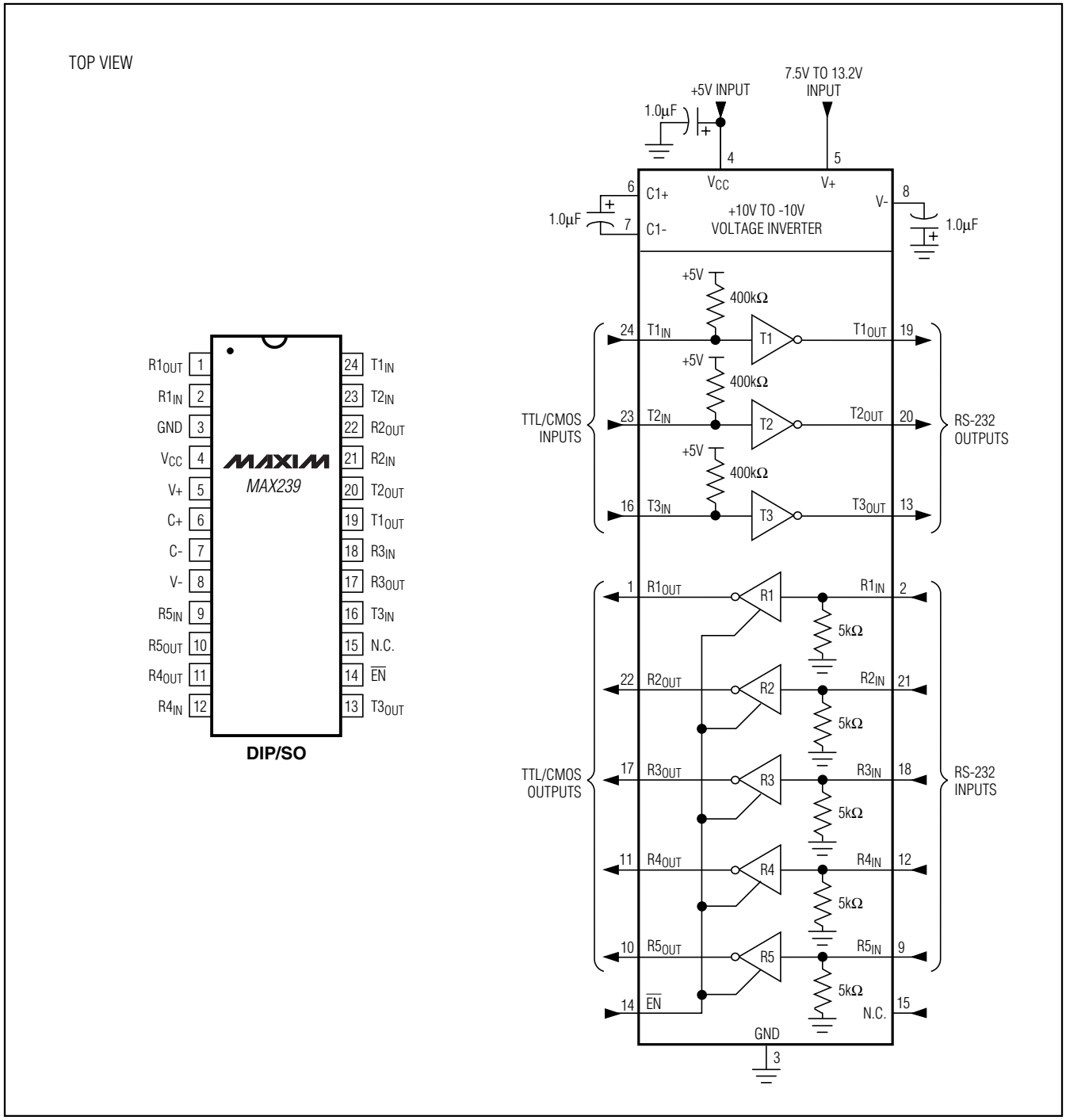

Figure 17. MAX239 Pin Configuration and Typical Operating Circuit

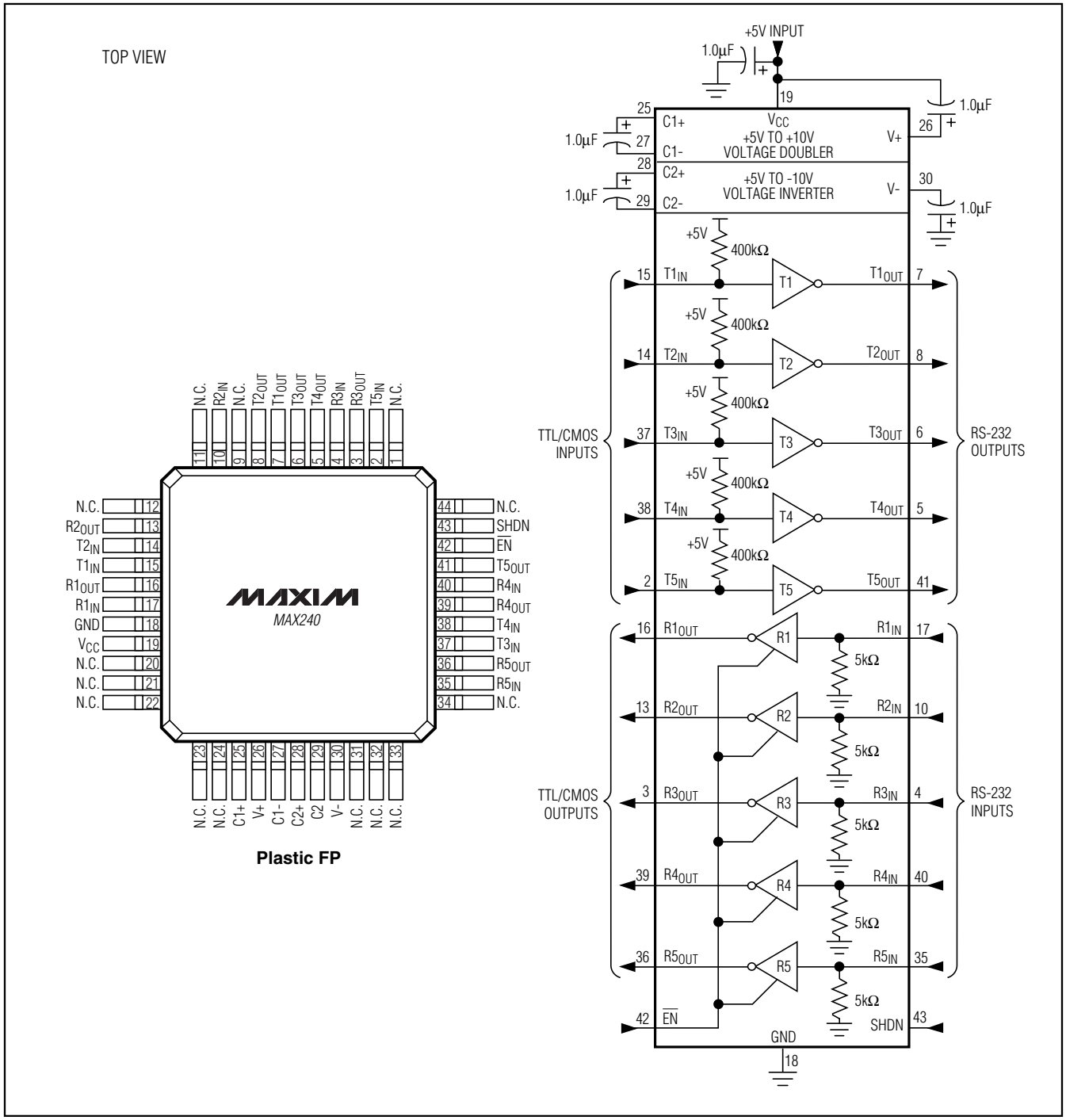

Figure 18. MAX240 Pin Configuration and Typical Operating Circuit

+5V-Powered, Multichannel RS-232 Drivers/Receivers

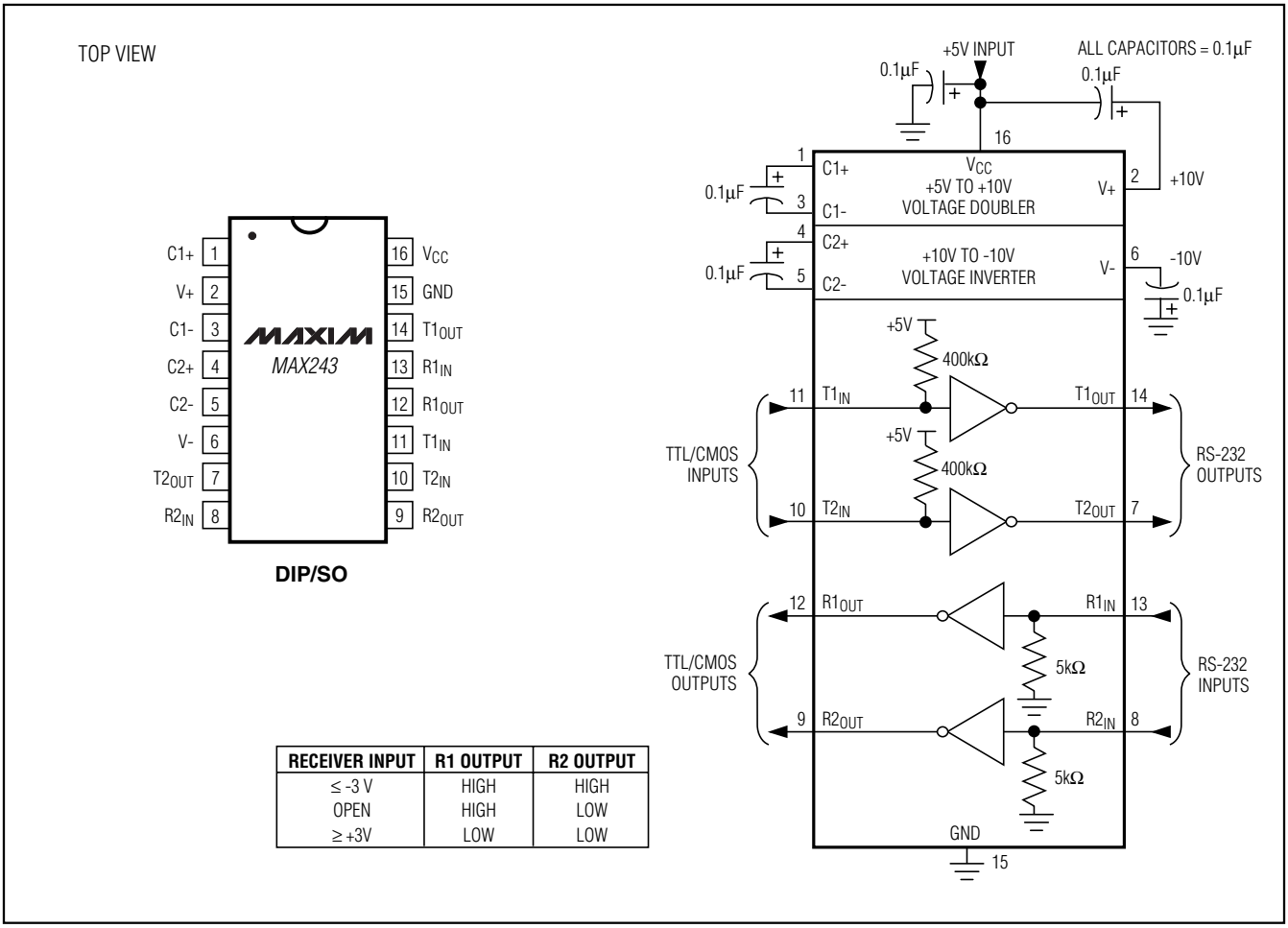

RECEIVER INPUT	R1 OUTPUT	R2 OUTPUT
≤ -3 V	HIGH	HIGH
OPEN	HIGH	LOW
≥ +3V	LOW	LOW

Figure 19. MAX243 Pin Configuration and Typical Operating Circuit

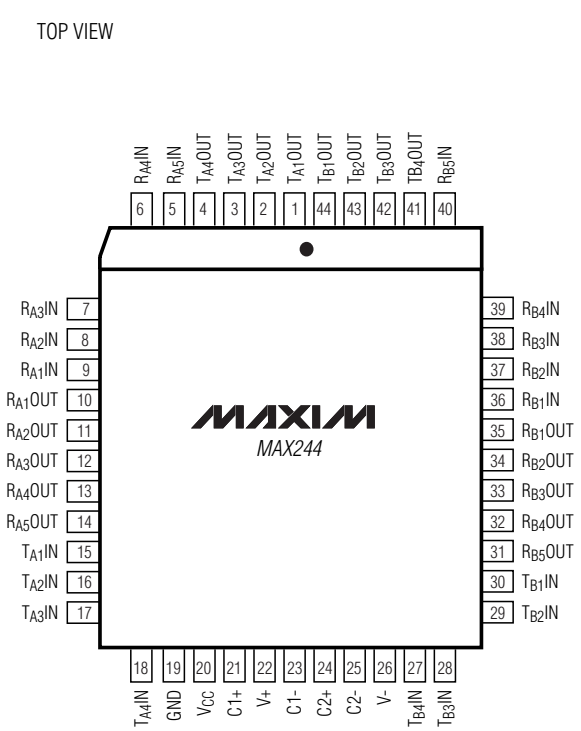

MAX249 FUNCTIONAL DESCRIPTION

10 RECEIVERS
- 5 A-SIDE RECEIVER
- 5 B-SIDE RECEIVER

8 TRANSMITTERS
- 4 A-SIDE TRANSMITTERS
- 4 B-SIDE TRANSMITTERS

NO CONTROL PINS

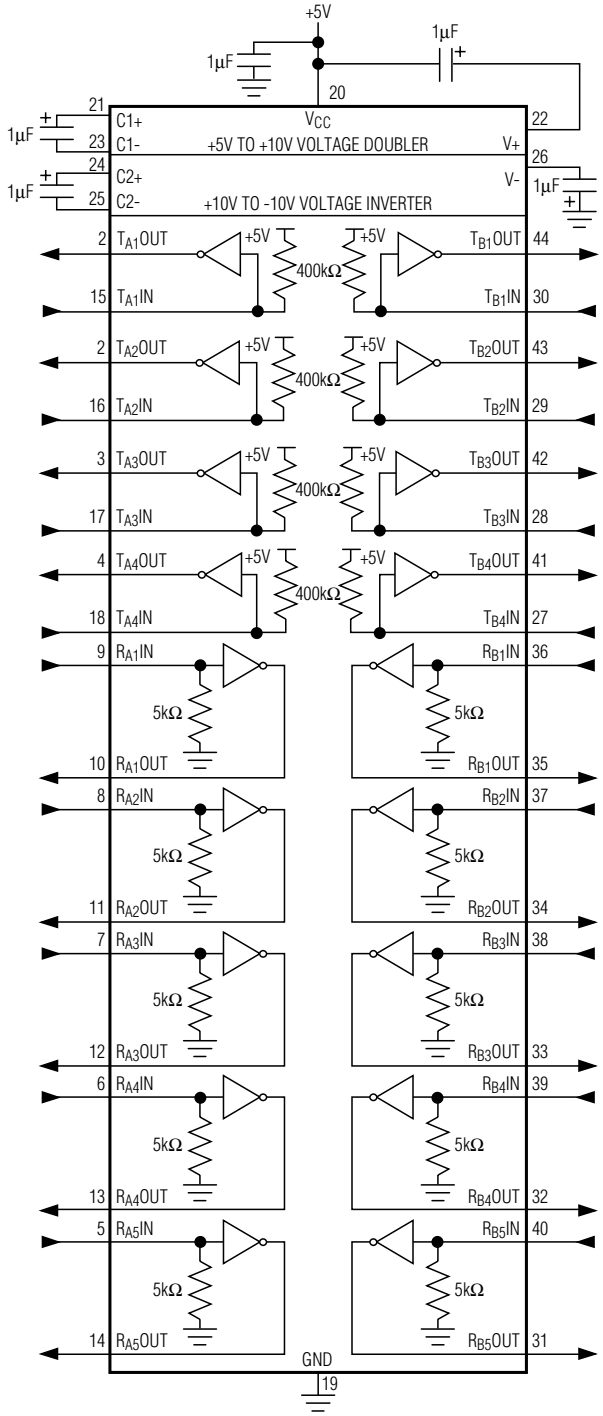

Figure 20. MAX244 Pin Configuration and Typical Operating Circuit

+5V-Powered, Multichannel RS-232 Drivers/Receivers

TOP VIEW

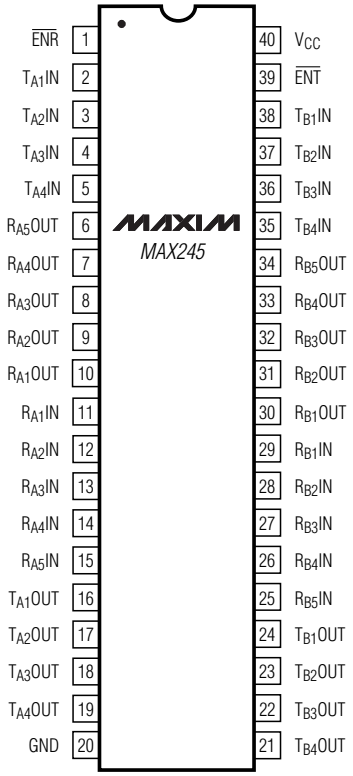

DIP

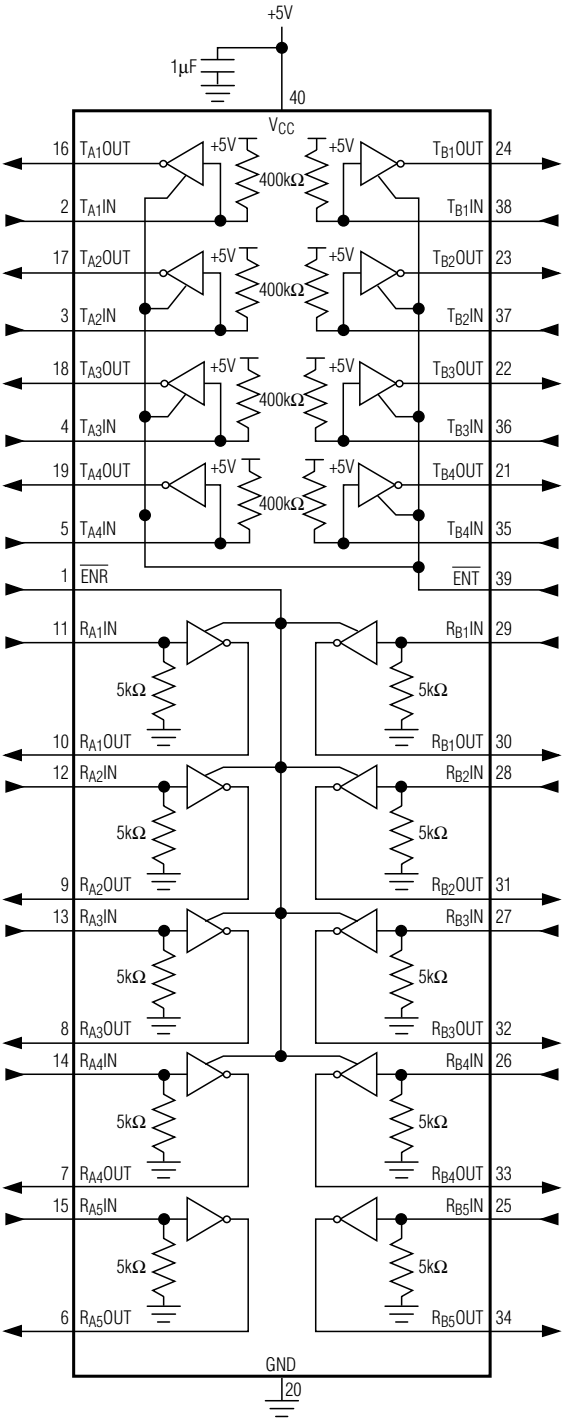

MAX245 FUNCTIONAL DESCRIPTION

10 RECEIVERS
- 5 A-SIDE RECEIVERS (R_{A5} ALWAYS ACTIVE)
- 5 B-SIDE RECEIVERS (R_{B5} ALWAYS ACTIVE)

8 TRANSMITTTERS
- 4 A-SIDE TRANSMITTERS

2 CONTROL PINS
- 1 RECEIVER ENABLE ($\overline{ENR}$)
- 1 TRANSMITTER ENABLE ($\overline{ENT}$)

Figure 21. MAX245 Pin Configuration and Typical Operating Circuit

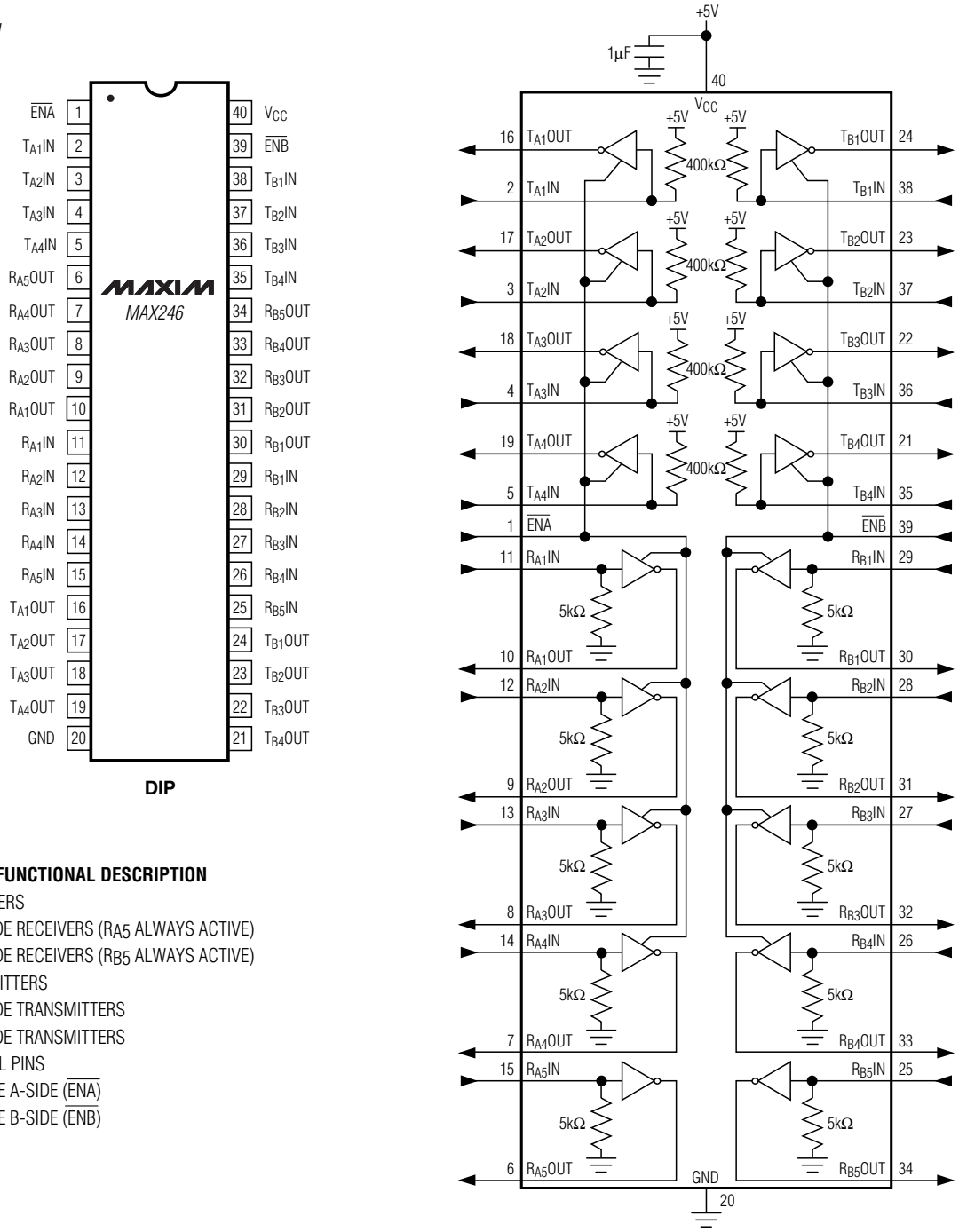

MAX246 FUNCTIONAL DESCRIPTION

10 RECEIVERS
- 5 A-SIDE RECEIVERS (R_{A5} ALWAYS ACTIVE)
- 5 B-SIDE RECEIVERS (R_{B5} ALWAYS ACTIVE)

8 TRANSMITTERS
- 4 A-SIDE TRANSMITTERS
- 4 B-SIDE TRANSMITTERS

2 CONTROL PINS
- ENABLE A-SIDE ($\overline{ENA}$)
- ENABLE B-SIDE ($\overline{ENB}$)

Figure 22. MAX246 Pin Configuration and Typical Operating Circuit

+5V-Powered, Multichannel RS-232 Drivers/Receivers

TOP VIEW

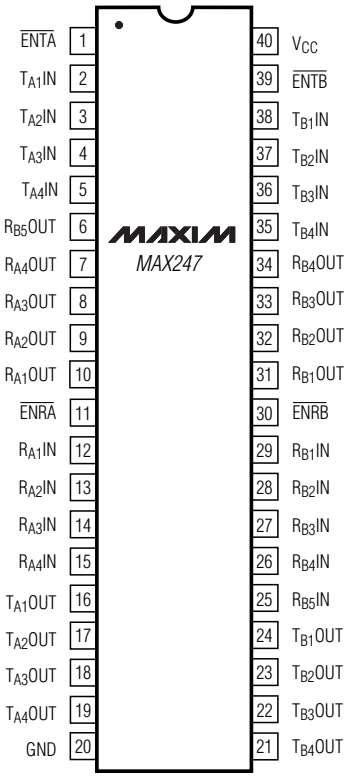

DIP

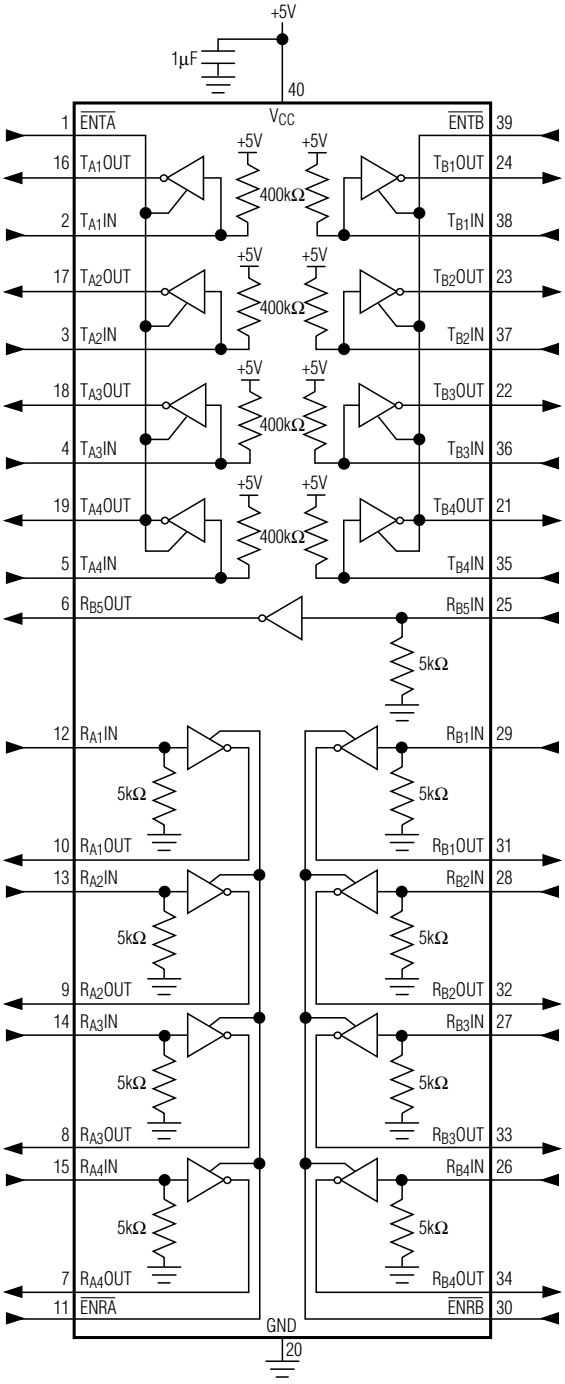

MAX247 FUNCTIONAL DESCRIPTION

9 RECEIVERS
- 4 A-SIDE RECEIVERS
- 5 B-SIDE RECEIVERS (R_{B5} ALWAYS ACTIVE)

8 TRANSMITTERS
- 4 A-SIDE TRANSMITTERS
- 4 B-SIDE TRANSMITTERS

4 CONTROL PINS
- ENABLE RECEIVER A-SIDE ($\overline{ENRA}$)
- ENABLE RECEIVER B-SIDE ($\overline{ENRB}$)
- ENABLE RECEIVER A-SIDE ($\overline{ENTA}$)
- ENABLE RECEIVERr B-SIDE ($\overline{ENTB}$)

Figure 23. MAX247 Pin Configuration and Typical Operating Circuit

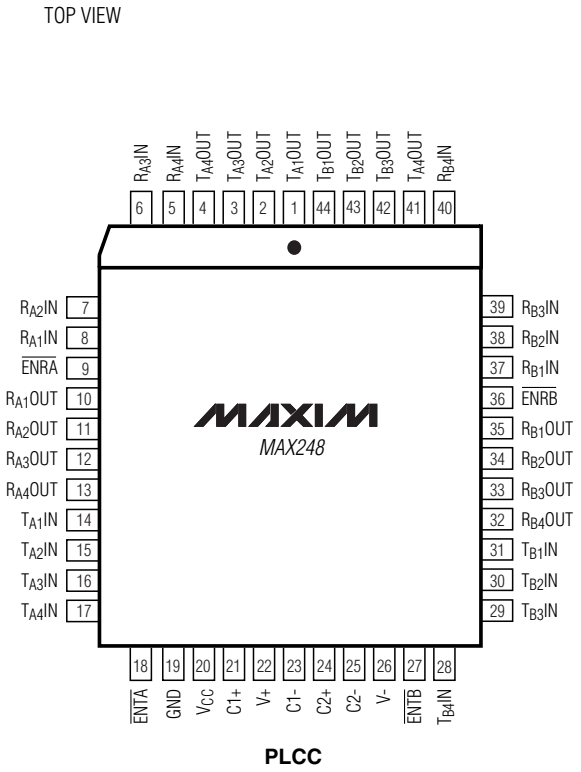

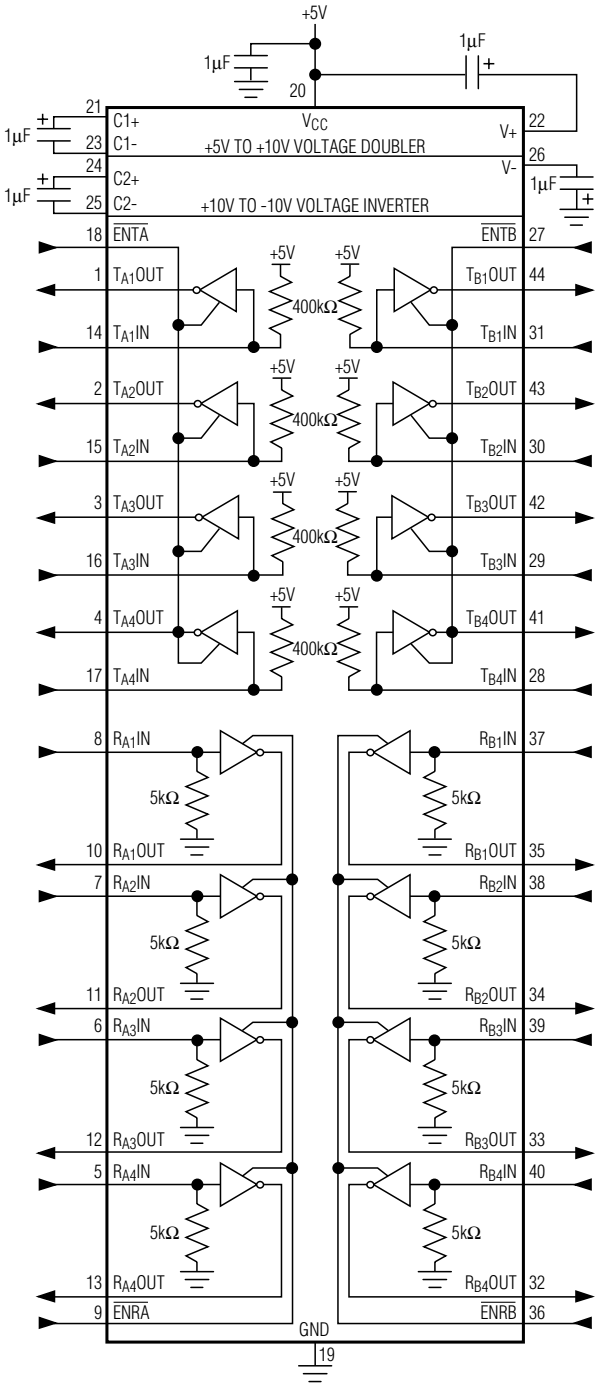

MAX248 FUNCTIONAL DESCRIPTION

8 RECEIVERS
- 4 A-SIDE RECEIVERS
- 4 B-SIDE RECEIVERS

8 TRANSMITTERS
- 4 A-SIDE TRANSMITTERS
- 4 B-SIDE TRANSMITTERS

4 CONTROL PINS
- ENABLE RECEIVER A-SIDE ($\overline{ENRA}$)
- ENABLE RECEIVER B-SIDE ($\overline{ENRB}$)
- ENABLE RECEIVER A-SIDE ($\overline{ENTA}$)
- ENABLE RECEIVER B-SIDE ($\overline{ENTB}$)

Figure 24. MAX248 Pin Configuration and Typical Operating Circuit

+5V-Powered, Multichannel RS-232 Drivers/Receivers

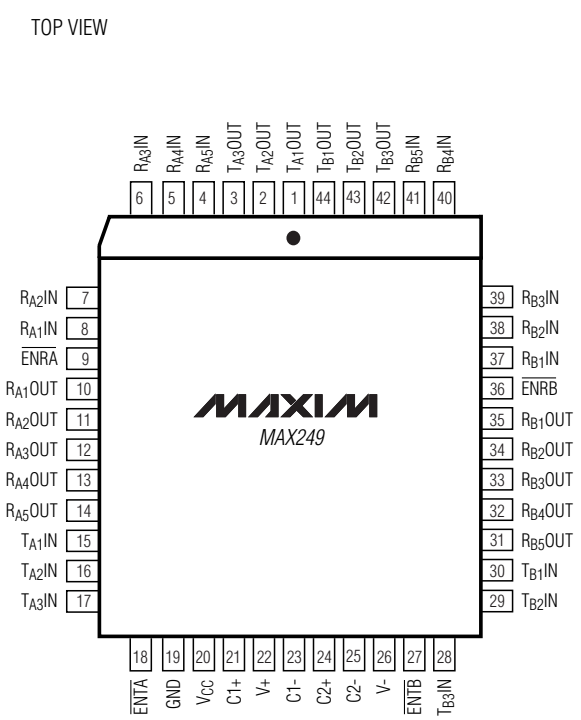

MAX249 FUNCTIONAL DESCRIPTION

10 RECEIVERS
- 5 A-SIDE RECEIVERS
- 5 B-SIDE RECEIVERS

6 TRANSMITTERS
- 3 A-SIDE TRANSMITTERS
- 3 B-SIDE TRANSMITTERS

4 CONTROL PINS
- ENABLE RECEIVER A-SIDE ($\overline{ENRA}$)
- ENABLE RECEIVER B-SIDE ($\overline{ENRB}$)
- ENABLE RECEIVER A-SIDE ($\overline{ENTA}$)
- ENABLE RECEIVER B-SIDE ($\overline{ENTB}$)

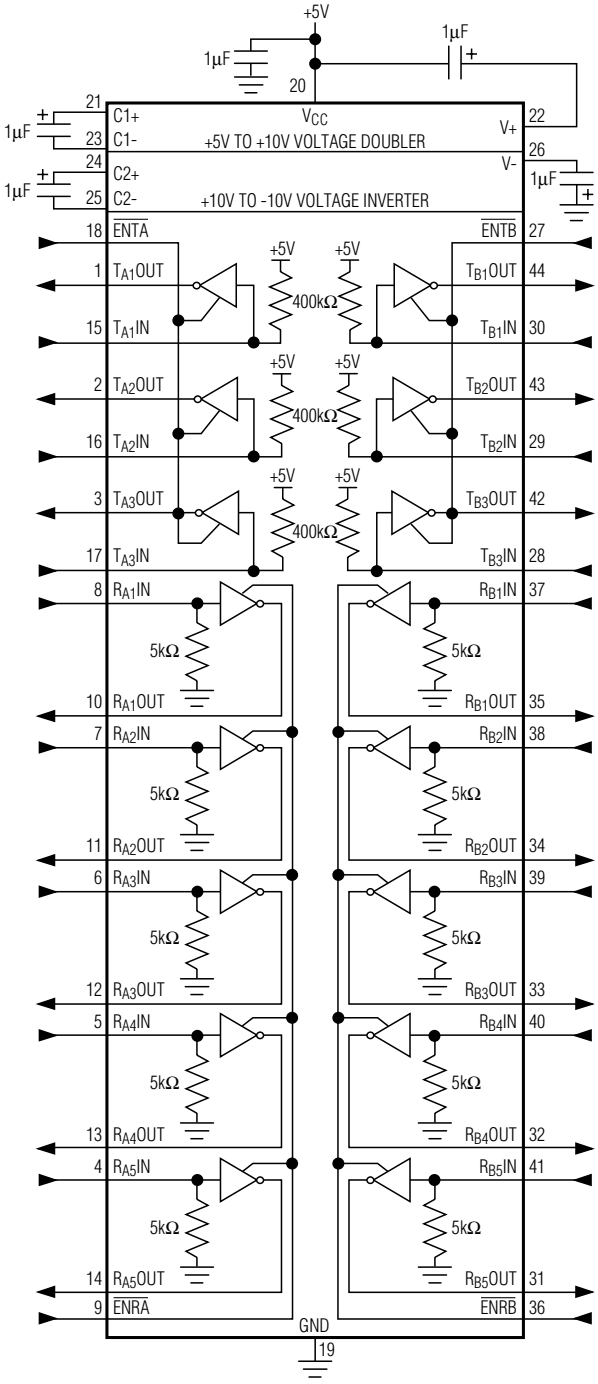

Figure 25. MAX249 Pin Configuration and Typical Operating Circuit

Ordering Information (continued)

PART	TEMP RANGE	PIN-PACKAGE
MAX222CPN	0°C to +70°C	18 Plastic DIP
MAX222CWN	0°C to +70°C	18 Wide SO
MAX222C/D	0°C to +70°C	Dice*
MAX222EPN	-40°C to +85°C	18 Plastic DIP
MAX222EWN	-40°C to +85°C	18 Wide SO
MAX222EJN	-40°C to +85°C	18 CERDIP
MAX222MJN	-55°C to +125°C	18 CERDIP
MAX223CAI	0°C to +70°C	28 SSOP
MAX223CWI	0°C to +70°C	28 Wide SO
MAX223C/D	0°C to +70°C	Dice*
MAX223EAI	-40°C to +85°C	28 SSOP
MAX223EWI	-40°C to +85°C	28 Wide SO
MAX225CWI	0°C to +70°C	28 Wide SO
MAX225EWI	-40°C to +85°C	28 Wide SO
MAX230CPP	0°C to +70°C	20 Plastic DIP
MAX230CWP	0°C to +70°C	20 Wide SO
MAX230C/D	0°C to +70°C	Dice*
MAX230EPP	-40°C to +85°C	20 Plastic DIP
MAX230EWP	-40°C to +85°C	20 Wide SO
MAX230EJP	-40°C to +85°C	20 CERDIP
MAX230MJP	-55°C to +125°C	20 CERDIP
MAX231CPD	0°C to +70°C	14 Plastic DIP
MAX231CWE	0°C to +70°C	16 Wide SO
MAX231CJD	0°C to +70°C	14 CERDIP
MAX231C/D	0°C to +70°C	Dice*
MAX231EPD	-40°C to +85°C	14 Plastic DIP
MAX231EWE	-40°C to +85°C	16 Wide SO
MAX231EJD	-40°C to +85°C	14 CERDIP
MAX231MJD	-55°C to +125°C	14 CERDIP
MAX232CPE	0°C to +70°C	16 Plastic DIP
MAX232CSE	0°C to +70°C	16 Narrow SO
MAX232CWE	0°C to +70°C	16 Wide SO
MAX232C/D	0°C to +70°C	Dice*
MAX232EPE	-40°C to +85°C	16 Plastic DIP
MAX232ESE	-40°C to +85°C	16 Narrow SO
MAX232EWE	-40°C to +85°C	16 Wide SO
MAX232EJE	-40°C to +85°C	16 CERDIP
MAX232MJE	-55°C to +125°C	16 CERDIP
MAX232MLP	-55°C to +125°C	20 LCC
MAX232ACPE	0°C to +70°C	16 Plastic DIP
MAX232ACSE	0°C to +70°C	16 Narrow SO
MAX232ACWE	0°C to +70°C	16 Wide SO

PART	TEMP RANGE	PIN-PACKAGE
MAX232AC/D	0°C to +70°C	Dice*
MAX232AEPE	-40°C to +85°C	16 Plastic DIP
MAX232AESE	-40°C to +85°C	16 Narrow SO
MAX232AEWE	-40°C to +85°C	16 Wide SO
MAX232AEJE	-40°C to +85°C	16 CERDIP
MAX232AMJE	-55°C to +125°C	16 CERDIP
MAX232AMLP	-55°C to +125°C	20 LCC
MAX233CPP	0°C to +70°C	20 Plastic DIP
MAX233EPP	-40°C to +85°C	20 Plastic DIP
MAX233ACPP	0°C to +70°C	20 Plastic DIP
MAX233ACWP	0°C to +70°C	20 Wide SO
MAX233AEPP	-40°C to +85°C	20 Plastic DIP
MAX233AEWP	-40°C to +85°C	20 Wide SO
MAX234CPE	0°C to +70°C	16 Plastic DIP
MAX234CWE	0°C to +70°C	16 Wide SO
MAX234C/D	0°C to +70°C	Dice*
MAX234EPE	-40°C to +85°C	16 Plastic DIP
MAX234EWE	-40°C to +85°C	16 Wide SO
MAX234EJE	-40°C to +85°C	16 CERDIP
MAX234MJE	-55°C to +125°C	16 CERDIP
MAX235CPG	0°C to +70°C	24 Wide Plastic DIP
MAX235EPG	-40°C to +85°C	24 Wide Plastic DIP
MAX235EDG	-40°C to +85°C	24 Ceramic SB
MAX235MDG	-55°C to +125°C	24 Ceramic SB
MAX236CNG	0°C to +70°C	24 Narrow Plastic DIP
MAX236CWG	0°C to +70°C	24 Wide SO
MAX236C/D	0°C to +70°C	Dice*
MAX236ENG	-40°C to +85°C	24 Narrow Plastic DIP
MAX236EWG	-40°C to +85°C	24 Wide SO
MAX236ERG	-40°C to +85°C	24 Narrow CERDIP
MAX236MRG	-55°C to +125°C	24 Narrow CERDIP
MAX237CNG	0°C to +70°C	24 Narrow Plastic DIP
MAX237CWG	0°C to +70°C	24 Wide SO
MAX237C/D	0°C to +70°C	Dice*
MAX237ENG	-40°C to +85°C	24 Narrow Plastic DIP
MAX237EWG	-40°C to +85°C	24 Wide SO
MAX237ERG	-40°C to +85°C	24 Narrow CERDIP
MAX237MRG	-55°C to +125°C	24 Narrow CERDIP
MAX238CNG	0°C to +70°C	24 Narrow Plastic DIP
MAX238CWG	0°C to +70°C	24 Wide SO
MAX238C/D	0°C to +70°C	Dice*
MAX238ENG	-40°C to +85°C	24 Narrow Plastic DIP

** Contact factory for dice specifications.*

+5V-Powered, Multichannel RS-232 Drivers/Receivers

Ordering Information (continued)

PART	TEMP RANGE	PIN-PACKAGE
MAX238EWG	-40°C to +85°C	24 Wide SO
MAX238ERG	-40°C to +85°C	24 Narrow CERDIP
MAX238MRG	-55°C to +125°C	24 Narrow CERDIP
MAX239CNG	0°C to +70°C	24 Narrow Plastic DIP
MAX239CWG	0°C to +70°C	24 Wide SO
MAX239C/D	0°C to +70°C	Dice*
MAX239ENG	-40°C to +85°C	24 Narrow Plastic DIP
MAX239EWG	-40°C to +85°C	24 Wide SO
MAX239ERG	-40°C to +85°C	24 Narrow CERDIP
MAX239MRG	-55°C to +125°C	24 Narrow CERDIP
MAX240CMH	0°C to +70°C	44 Plastic FP
MAX240C/D	0°C to +70°C	Dice*
MAX241CAI	0°C to +70°C	28 SSOP
MAX241CWI	0°C to +70°C	28 Wide SO
MAX241C/D	0°C to +70°C	Dice*
MAX241EAI	-40°C to +85°C	28 SSOP
MAX241EWI	-40°C to +85°C	28 Wide SO
MAX242CAP	0°C to +70°C	20 SSOP
MAX242CPN	0°C to +70°C	18 Plastic DIP
MAX242CWN	0°C to +70°C	18 Wide SO
MAX242C/D	0°C to +70°C	Dice*
MAX242EPN	-40°C to +85°C	18 Plastic DIP
MAX242EWN	-40°C to +85°C	18 Wide SO
MAX242EJN	-40°C to +85°C	18 CERDIP
MAX242MJN	-55°C to +125°C	18 CERDIP

PART	TEMP RANGE	PIN-PACKAGE
MAX243CPE	0°C to +70°C	16 Plastic DIP
MAX243CSE	0°C to +70°C	16 Narrow SO
MAX243CWE	0°C to +70°C	16 Wide SO
MAX243C/D	0°C to +70°C	Dice*
MAX243EPE	-40°C to +85°C	16 Plastic DIP
MAX243ESE	-40°C to +85°C	16 Narrow SO
MAX243EWE	-40°C to +85°C	16 Wide SO
MAX243EJE	-40°C to +85°C	16 CERDIP
MAX243MJE	-55°C to +125°C	16 CERDIP
MAX244CQH	0°C to +70°C	44 PLCC
MAX244C/D	0°C to +70°C	Dice*
MAX244EQH	-40°C to +85°C	44 PLCC
MAX245CPL	0°C to +70°C	40 Plastic DIP
MAX245C/D	0°C to +70°C	Dice*
MAX245EPL	-40°C to +85°C	40 Plastic DIP
MAX246CPL	0°C to +70°C	40 Plastic DIP
MAX246C/D	0°C to +70°C	Dice*
MAX246EPL	-40°C to +85°C	40 Plastic DIP
MAX247CPL	0°C to +70°C	40 Plastic DIP
MAX247C/D	0°C to +70°C	Dice*
MAX247EPL	-40°C to +85°C	40 Plastic DIP
MAX248CQH	0°C to +70°C	44 PLCC
MAX248C/D	0°C to +70°C	Dice*
MAX248EQH	-40°C to +85°C	44 PLCC
MAX249CQH	0°C to +70°C	44 PLCC
MAX249EQH	-40°C to +85°C	44 PLCC

** Contact factory for dice specifications.*

Package Information

For the latest package outline information, go to **www.maxim-ic.com/packages**.

Revision History

Pages changed at Rev 15: 2–5, 8, 9, 36

Maxim cannot assume responsibility for use of any circuitry other than circuitry entirely embodied in a Maxim product. No circuit patent licenses are implied. Maxim reserves the right to change the circuitry and specifications without notice at any time.

© 2006 Maxim Integrated Products MAXIM is a registered trademark of Maxim Integrated Products, Inc.

О компании

ООО "ТрейдЭлектроникс" - это оперативные поставки широкого спектра электронных компонентов отечественного и импортного производства напрямую от производителей и с крупнейших мировых складов. Реализуемая нашей компанией продукция насчитывает более полумиллиона наименований.

Благодаря этому наша компания предлагает к поставке практически не ограниченный ассортимент компонентов как оптовыми, мелкооптовыми партиями, так и в розницу.

Наличие собственной эффективной системы логистики обеспечивает надежную поставку продукции по конкурентным ценам в точно указанные сроки.

Срок поставки со стоков в **Европе и Америке – от 3 до 14 дней.**

Срок поставки из **Азии – от 10 дней.**

Благодаря развитой сети поставщиков, помогаем в поиске и приобретении экзотичных или снятых с производства компонентов.

Предоставляем спец цены на элементы для создания инженерных сэмплов.

Упорный труд, качественный результат дают нам право быть уверенными в себе и надежными для наших клиентов.

Наша компания это:

- Гарантия качества поставляемой продукции
- Широкий ассортимент
- Минимальные сроки поставок
- Техническая поддержка
- Подбор комплектации
- Индивидуальный подход
- Гибкое ценообразование

Наша организация особенно сильна в поставках модулей, микросхем, пассивных компонентов, ксайленсах (XC), EPF, EPM и силовой электроники.

Большой выбор предлагаемой продукции, различные виды оплаты и доставки, позволят Вам сэкономить время и получить максимум выгоды от сотрудничества с нами!

Trade Electronics.ru

гарантия бесперебойности производства и качества выпускаемой продукции

Перечень производителей, продукцию которых мы поставляем на российский рынок

AMD
ANALOG DEVICES
BOURNS
Coilcraft
élantec Semiconductor, Inc.
HARRIS
Infineon
JRC
MICREL
MOTOROLA
nichicon
PHILIPS
ROHM
SGS-THOMSON
Sipex
TAIYO YUDEN
TOKO
ZILOG
Winbond
Allegro
ATMEL
BURR - BROWN
EXAR
HITACHI
intel
Lattice
muRata
OKI
QUALCOMM
SAMSUNG
SHARP
SONY
TDK
TOSHIBA
KYOCERA
ALTERA
AVX
CITILYST
CYPRESS
FAIRCHILD SEMICONDUCTOR
HOLTEK
International IOR Rectifier
LINEAR TECHNOLOGY
MITSUBISHI
National Semiconductor
ON Semiconductor
REALTEK
SANYO
SHINDENGEN
SGS
TECCOR
TUNDRA
XILINX
Amphenol
Bay Linear
CIRRUS LOGIC
DALLAS
FUJITSU
IDT
intersil
MAXIM
molex
NEC
Panasonic
RENESAS
SII
SIEMENS
ST
Texas Instruments
VISHAY
ZETEX SEMICONDUCTORS

Trade Electronics.ru

гарантия бесперебойности производства и качества выпускаемой продукции

С удовольствием будем прорабатывать для Вас поставки всех необходимых компонентов по текущим запросам для скорейшего выявления групп элементов, по которым сотрудничество именно с нашей компанией будет для Вас максимально выгодным!

С уважением,

Менеджер отдела продаж ООО

«Трейд Электроникс»

Шишлаков Евгений

8 (495)668-30-28 доб 169

manager28@tradeelectronics.ru

http://www.tradeelectronics.ru/