Data sheet acquired from Harris Semiconductor
SCHS250A

August 1998 - Revised May 2000

# 9-Bit Odd/Even Parity Generator/Checker

## Features

- **Buffered Inputs**
- **Typical Propagation Delay**
  - **10ns at $V_{CC}$ = 5V, $T_A$ = 25$^o$C, $C_L$ = 50pF**
- **Exceeds 2kV ESD Protection per MIL-STD-883, Method 3015**
- **SCR-Latchup-Resistant CMOS Process and Circuit Design**
- **Speed of Bipolar FAST™/AS/S with Significantly Reduced Power Consumption**
- **Balanced Propagation Delays**
- **AC Types Feature 1.5V to 5.5V Operation and Balanced Noise Immunity at 30% of the Supply**
- **±24mA Output Drive Current**
  - **Fanout to 15 FAST™ ICs**
  - **Drives 50Ω Transmission Lines**

## Description

The ’AC280 and ’ACT280 are 9-bit odd/even parity generator/checkers that utilize Advanced CMOS Logic technology. Both even and odd parity outputs are available for checking or generating parity for words up to nine bits long. Even parity is indicated (∑E output is HIGH) when an even number of data inputs is HIGH. Odd parity is indicated (∑O output is HIGH) when an odd number of data inputs is HIGH. Parity checking for words larger than nine bits can be accomplished by tying the ∑E output to any input of an additional ’AC280, ’ACT280 parity checker.

## Ordering Information

| PART NUMBER | TEMP. RANGE ($^o$C) | PACKAGE |
|---|---|---|
| CD54AC280F3A | -55 to 125 | 14 Ld CERDIP |
| CD74AC280E | 0 to 70$^o$C, -40 to 85, -55 to 125 | 14 Ld PDIP |
| CD74AC280M | 0 to 70$^o$C, -40 to 85, -55 to 125 | 14 Ld SOIC |
| CD54ACT280F3A | -55 to 125 | 14 Ld CERDIP |
| CD74ACT280E | 0 to 70$^o$C, -40 to 85, -55 to 125 | 14 Ld PDIP |
| CD74ACT280M | 0 to 70$^o$C, -40 to 85, -55 to 125 | 14 Ld SOIC |

NOTES:

1. When ordering, use the entire part number. Add the suffix 96 to obtain the variant in the tape and reel.
2. Wafer and die for this part number is available which meets all electrical specifications. Please contact your local TI sales office or customer service for ordering information.

## Pinout

**CD54AC280, CD54ACT280**
**(CERDIP)**
**CD74AC280, CD74ACT280**
**(PDIP, SOIC)**
TOP VIEW

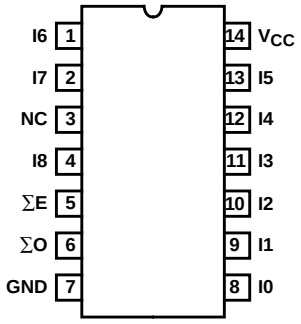


## Functional Diagram

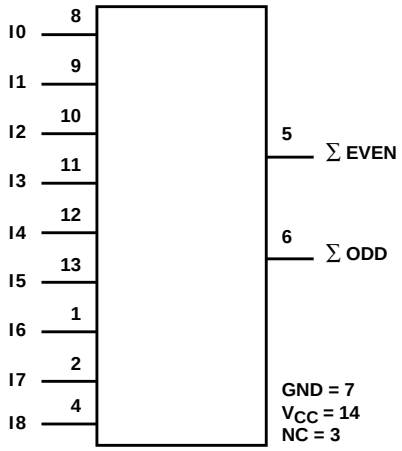


CAUTION: These devices are sensitive to electrostatic discharge. Users should follow proper IC Handling Procedures.

FAST™ is a Trademark of Fairchild Semiconductor.
Copyright © 2000, Texas Instruments Incorporated

## Absolute Maximum Ratings

DC Supply Voltage, $V_{CC}$ . . . . . -0.5V to 6V
DC Input Diode Current, $I_{IK}$
For $V_I$ < -0.5V or $V_I$ > $V_{CC}$ + 0.5V . . . . . ±20mA
DC Output Diode Current, $I_{OK}$
For $V_O$ < -0.5V or $V_O$ > $V_{CC}$ + 0.5V . . . . . ±50mA
DC Output Source or Sink Current per Output Pin, $I_O$
For $V_O$ > -0.5V or $V_O$ < $V_{CC}$ + 0.5V . . . . . ±50mA
DC $V_{CC}$ or Ground Current, $I_{CC}$ or $I_{GND}$ (Note 3) . . . . . ±100mA

## Operating Conditions

Temperature Range, $T_A$ . . . . . -55°C to 125°C
Supply Voltage Range, $V_{CC}$ (Note 4)
AC Types. . . . . 1.5V to 5.5V
ACT Types . . . . . 4.5V to 5.5V
DC Input or Output Voltage, $V_I$, $V_O$ . . . . . 0V to $V_{CC}$
Input Rise and Fall Slew Rate, dt/dv
AC Types, 1.5V to 3V . . . . . 50ns (Max)
AC Types, 3.6V to 5.5V. . . . . 20ns (Max)
ACT Types, 4.5V to 5.5V. . . . . 10ns (Max)

## Thermal Information

Thermal Resistance (Typical, Note 5) $\theta_{JA}$ (°C/W)
PDIP Package . . . . . ___
SOIC Package . . . . . ___
Maximum Junction Temperature (Plastic Package) . . . . . 150°C
Maximum Storage Temperature Range . . . . . -65°C to 150°C
Maximum Lead Temperature (Soldering 10s) . . . . . 300°C

*CAUTION: Stresses above those listed in "Absolute Maximum Ratings" may cause permanent damage to the device. This is a stress only rating and operation of the device at these or any other conditions above those indicated in the operational sections of this specification is not implied.*

NOTES:

3. For up to 4 outputs per device, add ±25mA for each additional output.
4. Unless otherwise specified, all voltages are referenced to ground.
5. $\theta_{JA}$ is measured with the component mounted on an evaluation PC board in free air.

## DC Electrical Specifications

| PARAMETER | SYMBOL | TEST CONDITIONS $V_I$ (V) | TEST CONDITIONS $I_O$ (mA) | $V_{CC}$ (V) | 25°C MIN | 25°C MAX | -40°C TO 85°C MIN | -40°C TO 85°C MAX | -55°C TO 125°C MIN | -55°C TO 125°C MAX | UNITS |
|---|---|---|---|---|---|---|---|---|---|---|---|
| **AC TYPES** | | | | | | | | | | | |
| High Level Input Voltage | $V_{IH}$ | - | - | 1.5 | 1.2 | - | 1.2 | - | 1.2 | - | V |
| | | | | 3 | 2.1 | - | 2.1 | - | 2.1 | - | V |
| | | | | 5.5 | 3.85 | - | 3.85 | - | 3.85 | - | V |
| Low Level Input Voltage | $V_{IL}$ | - | - | 1.5 | - | 0.3 | - | 0.3 | - | 0.3 | V |
| | | | | 3 | - | 0.9 | - | 0.9 | - | 0.9 | V |
| | | | | 5.5 | - | 1.65 | - | 1.65 | - | 1.65 | V |
| High Level Output Voltage | $V_{OH}$ | $V_{IH}$ or $V_{IL}$ | -0.05 | 1.5 | 1.4 | - | 1.4 | - | 1.4 | - | V |
| | | | -0.05 | 3 | 2.9 | - | 2.9 | - | 2.9 | - | V |
| | | | -0.05 | 4.5 | 4.4 | - | 4.4 | - | 4.4 | - | V |
| | | | -4 | 3 | 2.58 | - | 2.48 | - | 2.4 | - | V |
| | | | -24 | 4.5 | 3.94 | - | 3.8 | - | 3.7 | - | V |
| | | | -75 (Note 6, 7) | 5.5 | - | - | 3.85 | - | - | - | V |
| | | | -50 (Note 6, 7) | 5.5 | - | - | - | - | 3.85 | - | V |

## DC Electrical Specifications (Continued)

| PARAMETER | SYMBOL | TEST CONDITIONS $V_I$ (V) | TEST CONDITIONS $I_O$ (mA) | $V_{CC}$ (V) | 25°C MIN | 25°C MAX | -40°C TO 85°C MIN | -40°C TO 85°C MAX | -55°C TO 125°C MIN | -55°C TO 125°C MAX | UNITS |
|---|---|---|---|---|---|---|---|---|---|---|---|
| Low Level Output Voltage | $V_{OL}$ | $V_{IH}$ or $V_{IL}$ | 0.05 | 1.5 | - | 0.1 | - | 0.1 | - | 0.1 | V |
| | | | 0.05 | 3 | - | 0.1 | - | 0.1 | - | 0.1 | V |
| | | | 0.05 | 4.5 | - | 0.1 | - | 0.1 | - | 0.1 | V |
| | | | 12 | 3 | - | 0.36 | - | 0.44 | - | 0.5 | V |
| | | | 24 | 4.5 | - | 0.36 | - | 0.44 | - | 0.5 | V |
| | | | 75 (Note 6, 7) | 5.5 | - | - | - | 1.65 | - | - | V |
| | | | 50 (Note 6, 7) | 5.5 | - | - | - | - | - | 1.65 | V |
| Input Leakage Current | $I_I$ | $V_{CC}$ or GND | - | 5.5 | - | ±0.1 | - | ±1 | - | ±1 | µA |
| Quiescent Supply Current MSI | $I_{CC}$ | $V_{CC}$ or GND | 0 | 5.5 | - | 8 | - | 80 | - | 160 | µA |
| **ACT TYPES** | | | | | | | | | | | |
| High Level Input Voltage | $V_{IH}$ | - | - | 4.5 to 5.5 | 2 | - | 2 | - | 2 | - | V |
| Low Level Input Voltage | $V_{IL}$ | - | - | 4.5 to 5.5 | - | 0.8 | - | 0.8 | - | 0.8 | V |
| High Level Output Voltage | $V_{OH}$ | $V_{IH}$ or $V_{IL}$ | -0.05 | 4.5 | 4.4 | - | 4.4 | - | 4.4 | - | V |
| | | | -24 | 4.5 | 3.94 | - | 3.8 | - | 3.7 | - | V |
| | | | -75 (Note 6, 7) | 5.5 | - | - | 3.85 | - | - | - | V |
| | | | -50 (Note 6, 7) | 5.5 | - | - | - | - | 3.85 | - | V |
| Low Level Output Voltage | $V_{OL}$ | $V_{IH}$ or $V_{IL}$ | 0.05 | 4.5 | - | 0.1 | - | 0.1 | - | 0.1 | V |
| | | | 24 | 4.5 | - | 0.36 | - | 0.44 | - | 0.5 | V |
| | | | 75 (Note 6, 7) | 5.5 | - | - | - | 1.65 | - | - | V |
| | | | 50 (Note 6, 7) | 5.5 | - | - | - | - | - | 1.65 | V |
| Input Leakage Current | $I_I$ | $V_{CC}$ or GND | - | 5.5 | - | ±0.1 | - | ±1 | - | ±1 | µA |
| Quiescent Supply Current MSI | $I_{CC}$ | $V_{CC}$ or GND | 0 | 5.5 | - | 8 | - | 80 | - | 160 | µA |
| Additional Supply Current per Input Pin TTL Inputs High 1 Unit Load | $\Delta I_{CC}$ | $V_{CC}$ -2.1 | - | 4.5 to 5.5 | - | 2.4 | - | 2.8 | - | 3 | mA |

NOTES:

6. Test one output at a time for a 1-second maximum duration. Measurement is made by forcing current and measuring voltage to minimize power dissipation.
7. Test verifies a minimum 50Ω transmission-line-drive capability at 85°C, 75Ω at 125°C.

## ACT Input Load Table

| INPUT | UNIT LOAD |
|---|---|
| All | 1.43 |

NOTE: Unit load is $\Delta I_{CC}$ limit specified in DC Electrical Specifications Table, e.g., 2.4mA max at 25°C.

**Switching Specifications** Input $t_r$, $t_f$ = 3ns, $C_L$ = 50pF (Worst Case)

| PARAMETER | SYMBOL | $V_{CC}$ (V) | -40°C TO 85°C | | | -55°C TO 125°C | | | UNITS |
|---|---|---|---|---|---|---|---|---|---|
| | | | MIN | TYP | MAX | MIN | TYP | MAX | |
| **AC TYPES** | | | | | | | | | |
| Propagation Delay, Any Input to ∑O | $t_{PLH}$, $t_{PHL}$ | 1.5 | - | - | 239 | - | - | 263 | ns |
| | | 3.3 (Note 9) | 7.5 | - | 26 | 7.3 | - | 29 | ns |
| | | 5 (Note 10) | 5.4 | - | 19.1 | 5.3 | - | 21 | ns |
| Propagation Delay, Any Input to ∑E | $t_{PLH}$, $t_{PHL}$ | 1.5 | - | - | 227 | - | - | 250 | ns |
| | | 3.3 | 7.2 | - | 25 | 7 | - | 28 | ns |
| | | 5 | 5.2 | - | 18.2 | 5 | - | 20 | ns |
| Input Capacitance | $C_I$ | - | - | - | 10 | - | - | 10 | pF |
| Power Dissipation Capacitance | $C_{PD}$ (Note 11) | - | - | 115 | - | - | 115 | - | pF |
| **ACT TYPES** | | | | | | | | | |
| Propagation Delay, Any Input to ∑O | $t_{PLH}$, $t_{PHL}$ | 5 (Note 10) | 5.6 | - | 19.6 | 5.4 | - | 21.6 | ns |
| Propagation Delay, Any Input to ∑E | $t_{PLH}$, $t_{PHL}$ | 5 | 5.6 | - | 19.6 | 5.4 | - | 21.6 | ns |
| Input Capacitance | $C_I$ | - | - | - | 10 | - | - | 10 | pF |
| Power Dissipation Capacitance | $C_{PD}$ (Note 11) | - | - | 115 | - | - | 115 | - | pF |

NOTES:

8. Limits tested 100%
9. 3.3V Min is at 3.6V, Max is at 3V.
10. 5V Min is at 5.5V, Max is at 4.5V.
11. $C_{PD}$ is used to determine the dynamic power consumption per package.
    AC: $P_D = V_{CC}^2 f_i (C_{PD} + C_L)$
    ACT: $P_D = V_{CC}^2 f_i (C_{PD} + C_L) + V_{CC} \Delta I_{CC}$ where $f_i$ = input frequency, $C_L$ = output load capacitance, $V_{CC}$ = supply voltage.

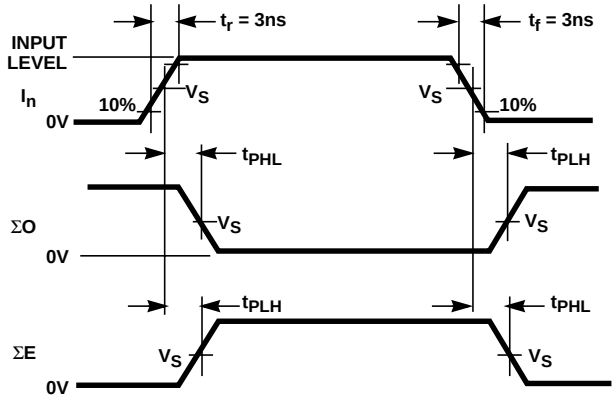


**FIGURE 1.**

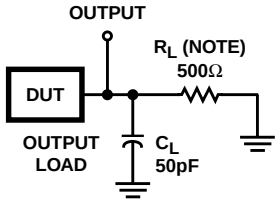


NOTE: For AC Series Only: When $V_{CC}$ = 1.5V, $R_L$ = 1kΩ.

| | AC | ACT |
|---|---|---|
| Input Level | $V_{CC}$ | 3V |
| Input Switching Voltage, $V_S$ | 0.5 $V_{CC}$ | 1.5V |
| Output Switching Voltage, $V_S$ | 0.5 $V_{CC}$ | 0.5 $V_{CC}$ |

**FIGURE 2. PROPAGATION DELAY TIMES**

## PACKAGING INFORMATION

| Orderable Device | Status [1] | Package Type | Package Drawing | Pins | Package Qty | Eco Plan [2] | Lead/Ball Finish | MSL Peak Temp [3] |
|---|---|---|---|---|---|---|---|---|
| CD54AC280F3A | ACTIVE | CDIP | J | 14 | 1 | TBD | A42 | N / A for Pkg Type |
| CD54ACT280F3A | ACTIVE | CDIP | J | 14 | 1 | TBD | A42 | N / A for Pkg Type |
| CD74AC280E | ACTIVE | PDIP | N | 14 | 25 | Pb-Free (RoHS) | CU NIPDAU | N / A for Pkg Type |
| CD74AC280EE4 | ACTIVE | PDIP | N | 14 | 25 | Pb-Free (RoHS) | CU NIPDAU | N / A for Pkg Type |
| CD74AC280M | ACTIVE | SOIC | D | 14 | 50 | Green (RoHS & no Sb/Br) | CU NIPDAU | Level-1-260C-UNLIM |
| CD74AC280M96 | ACTIVE | SOIC | D | 14 | 2500 | Green (RoHS & no Sb/Br) | CU NIPDAU | Level-1-260C-UNLIM |
| CD74AC280M96E4 | ACTIVE | SOIC | D | 14 | 2500 | Green (RoHS & no Sb/Br) | CU NIPDAU | Level-1-260C-UNLIM |
| CD74AC280M96G4 | ACTIVE | SOIC | D | 14 | 2500 | Green (RoHS & no Sb/Br) | CU NIPDAU | Level-1-260C-UNLIM |
| CD74AC280ME4 | ACTIVE | SOIC | D | 14 | 50 | Green (RoHS & no Sb/Br) | CU NIPDAU | Level-1-260C-UNLIM |
| CD74AC280MG4 | ACTIVE | SOIC | D | 14 | 50 | Green (RoHS & no Sb/Br) | CU NIPDAU | Level-1-260C-UNLIM |
| CD74ACT280E | ACTIVE | PDIP | N | 14 | 25 | Pb-Free (RoHS) | CU NIPDAU | N / A for Pkg Type |
| CD74ACT280EE4 | ACTIVE | PDIP | N | 14 | 25 | Pb-Free (RoHS) | CU NIPDAU | N / A for Pkg Type |
| CD74ACT280M | ACTIVE | SOIC | D | 14 | 50 | Green (RoHS & no Sb/Br) | CU NIPDAU | Level-1-260C-UNLIM |
| CD74ACT280M96 | ACTIVE | SOIC | D | 14 | 2500 | Green (RoHS & no Sb/Br) | CU NIPDAU | Level-1-260C-UNLIM |
| CD74ACT280M96E4 | ACTIVE | SOIC | D | 14 | 2500 | Green (RoHS & no Sb/Br) | CU NIPDAU | Level-1-260C-UNLIM |
| CD74ACT280M96G4 | ACTIVE | SOIC | D | 14 | 2500 | Green (RoHS & no Sb/Br) | CU NIPDAU | Level-1-260C-UNLIM |
| CD74ACT280ME4 | ACTIVE | SOIC | D | 14 | 50 | Green (RoHS & no Sb/Br) | CU NIPDAU | Level-1-260C-UNLIM |
| CD74ACT280MG4 | ACTIVE | SOIC | D | 14 | 50 | Green (RoHS & no Sb/Br) | CU NIPDAU | Level-1-260C-UNLIM |

[1] The marketing status values are defined as follows:
**ACTIVE:** Product device recommended for new designs.
**LIFEBUY:** TI has announced that the device will be discontinued, and a lifetime-buy period is in effect.
**NRND:** Not recommended for new designs. Device is in production to support existing customers, but TI does not recommend using this part in a new design.
**PREVIEW:** Device has been announced but is not in production. Samples may or may not be available.
**OBSOLETE:** TI has discontinued the production of the device.

[2] Eco Plan - The planned eco-friendly classification: Pb-Free (RoHS), Pb-Free (RoHS Exempt), or Green (RoHS & no Sb/Br) - please check http://www.ti.com/productcontent for the latest availability information and additional product content details.
**TBD:** The Pb-Free/Green conversion plan has not been defined.
**Pb-Free (RoHS):** TI's terms "Lead-Free" or "Pb-Free" mean semiconductor products that are compatible with the current RoHS requirements for all 6 substances, including the requirement that lead not exceed 0.1% by weight in homogeneous materials. Where designed to be soldered at high temperatures, TI Pb-Free products are suitable for use in specified lead-free processes.
**Pb-Free (RoHS Exempt):** This component has a RoHS exemption for either 1) lead-based flip-chip solder bumps used between the die and package, or 2) lead-based die adhesive used between the die and leadframe. The component is otherwise considered Pb-Free (RoHS compatible) as defined above.

**Green (RoHS & no Sb/Br):** TI defines "Green" to mean Pb-Free (RoHS compatible), and free of Bromine (Br) and Antimony (Sb) based flame retardants (Br or Sb do not exceed 0.1% by weight in homogeneous material)

**(3)** MSL, Peak Temp. -- The Moisture Sensitivity Level rating according to the JEDEC industry standard classifications, and peak solder temperature.

**Important Information and Disclaimer:**The information provided on this page represents TI's knowledge and belief as of the date that it is provided. TI bases its knowledge and belief on information provided by third parties, and makes no representation or warranty as to the accuracy of such information. Efforts are underway to better integrate information from third parties. TI has taken and continues to take reasonable steps to provide representative and accurate information but may not have conducted destructive testing or chemical analysis on incoming materials and chemicals. TI and TI suppliers consider certain information to be proprietary, and thus CAS numbers and other limited information may not be available for release.

In no event shall TI's liability arising out of such information exceed the total purchase price of the TI part(s) at issue in this document sold by TI to Customer on an annual basis.

## TAPE AND REEL INFORMATION

### REEL DIMENSIONS

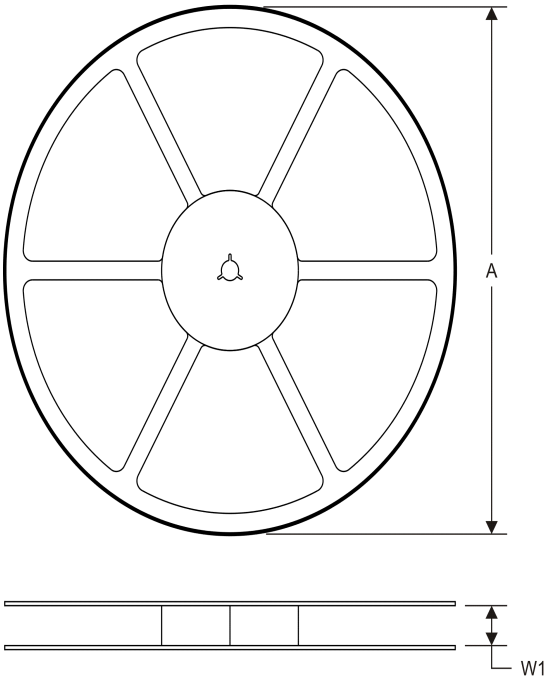


### TAPE DIMENSIONS

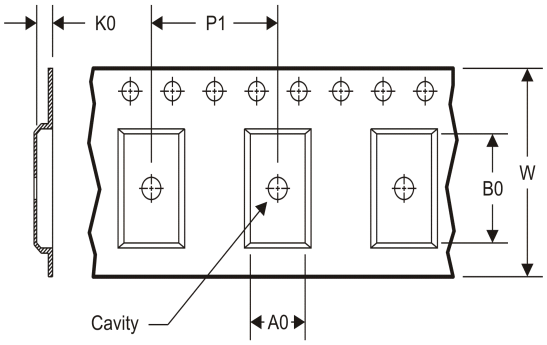


| | |
|---|---|
| A0 | Dimension designed to accommodate the component width |
| B0 | Dimension designed to accommodate the component length |
| K0 | Dimension designed to accommodate the component thickness |
| W | Overall width of the carrier tape |
| P1 | Pitch between successive cavity centers |

### TAPE AND REEL INFORMATION

*All dimensions are nominal

| Device | Package Type | Package Drawing | Pins | SPQ | Reel Diameter (mm) | Reel Width W1 (mm) | A0 (mm) | B0 (mm) | K0 (mm) | P1 (mm) | W (mm) | Pin1 Quadrant |
|---|---|---|---|---|---|---|---|---|---|---|---|---|
| CD74AC280M96 | SOIC | D | 14 | 2500 | 330.0 | 16.4 | 6.5 | 9.0 | 2.1 | 8.0 | 16.0 | Q1 |
| CD74ACT280M96 | SOIC | D | 14 | 2500 | 330.0 | 16.4 | 6.5 | 9.0 | 2.1 | 8.0 | 16.0 | Q1 |

**TAPE AND REEL BOX DIMENSIONS**

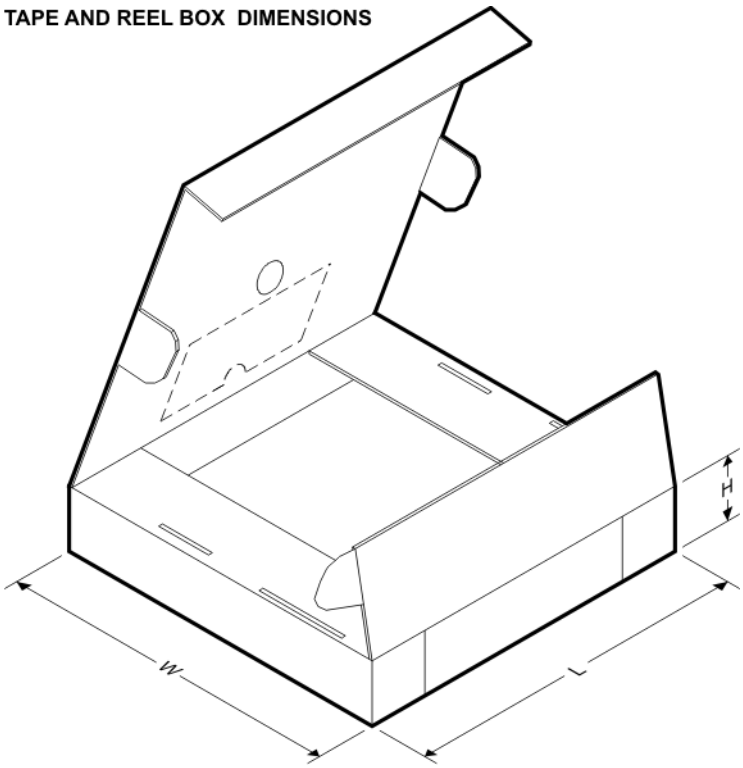


*All dimensions are nominal

| Device | Package Type | Package Drawing | Pins | SPQ | Length (mm) | Width (mm) | Height (mm) |
|---|---|---|---|---|---|---|---|
| CD74AC280M96 | SOIC | D | 14 | 2500 | 367.0 | 367.0 | 38.0 |
| CD74ACT280M96 | SOIC | D | 14 | 2500 | 367.0 | 367.0 | 38.0 |

J (R–GDIP–T**) CERAMIC DUAL IN–LINE PACKAGE

14 LEADS SHOWN

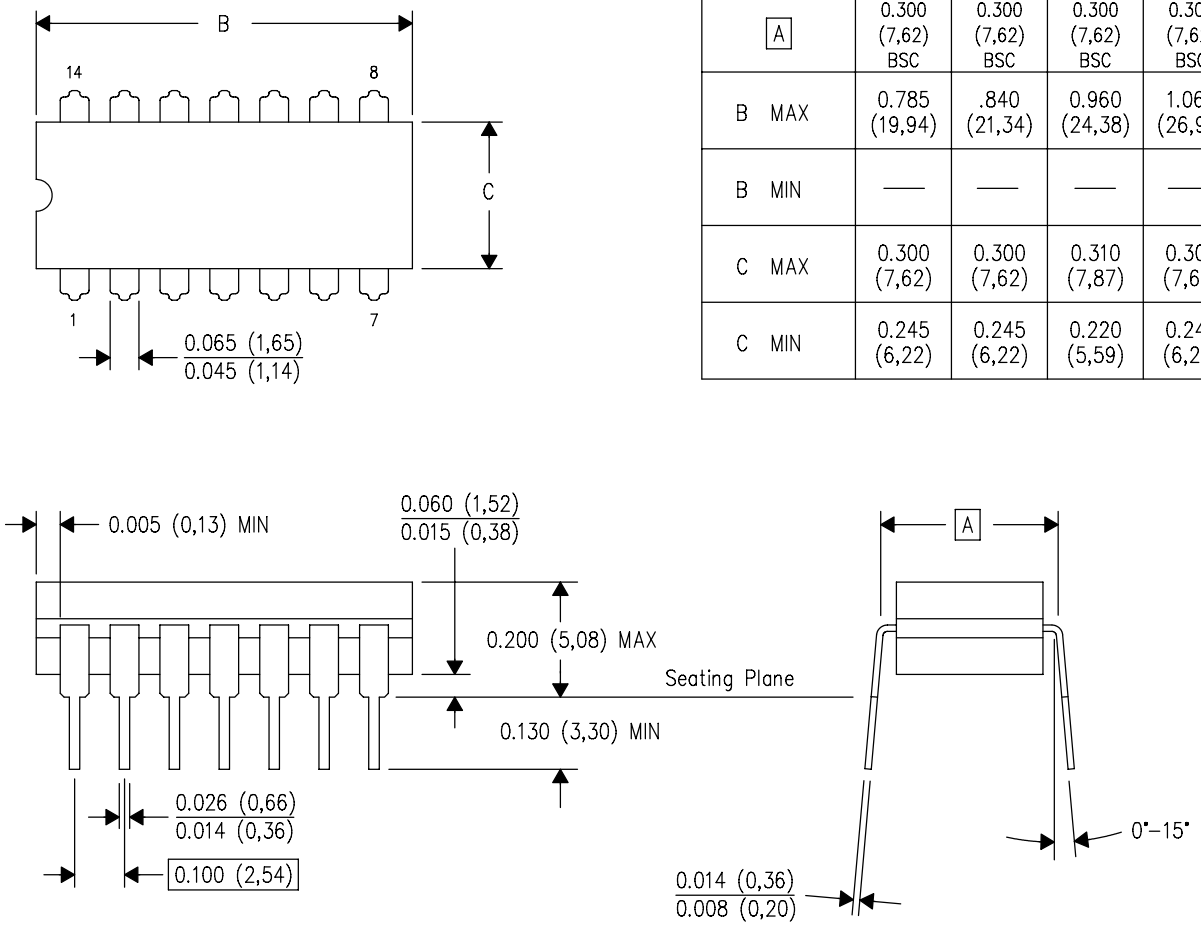


| DIM \ PINS ** | 14 | 16 | 18 | 20 |
|---|---|---|---|---|
| A | 0.300 (7,62) BSC | 0.300 (7,62) BSC | 0.300 (7,62) BSC | 0.300 (7,62) BSC |
| B MAX | 0.785 (19,94) | .840 (21,34) | 0.960 (24,38) | 1.060 (26,92) |
| B MIN | — | — | — | — |
| C MAX | 0.300 (7,62) | 0.300 (7,62) | 0.310 (7,87) | 0.300 (7,62) |
| C MIN | 0.245 (6,22) | 0.245 (6,22) | 0.220 (5,59) | 0.245 (6,22) |

4040083/F 03/03

NOTES:
- A. All linear dimensions are in inches (millimeters).
- B. This drawing is subject to change without notice.
- C. This package is hermetically sealed with a ceramic lid using glass frit.
- D. Index point is provided on cap for terminal identification only on press ceramic glass frit seal only.
- E. Falls within MIL STD 1835 GDIP1–T14, GDIP1–T16, GDIP1–T18 and GDIP1–T20.

## N (R–PDIP–T**) PLASTIC DUAL–IN–LINE PACKAGE

16 PINS SHOWN

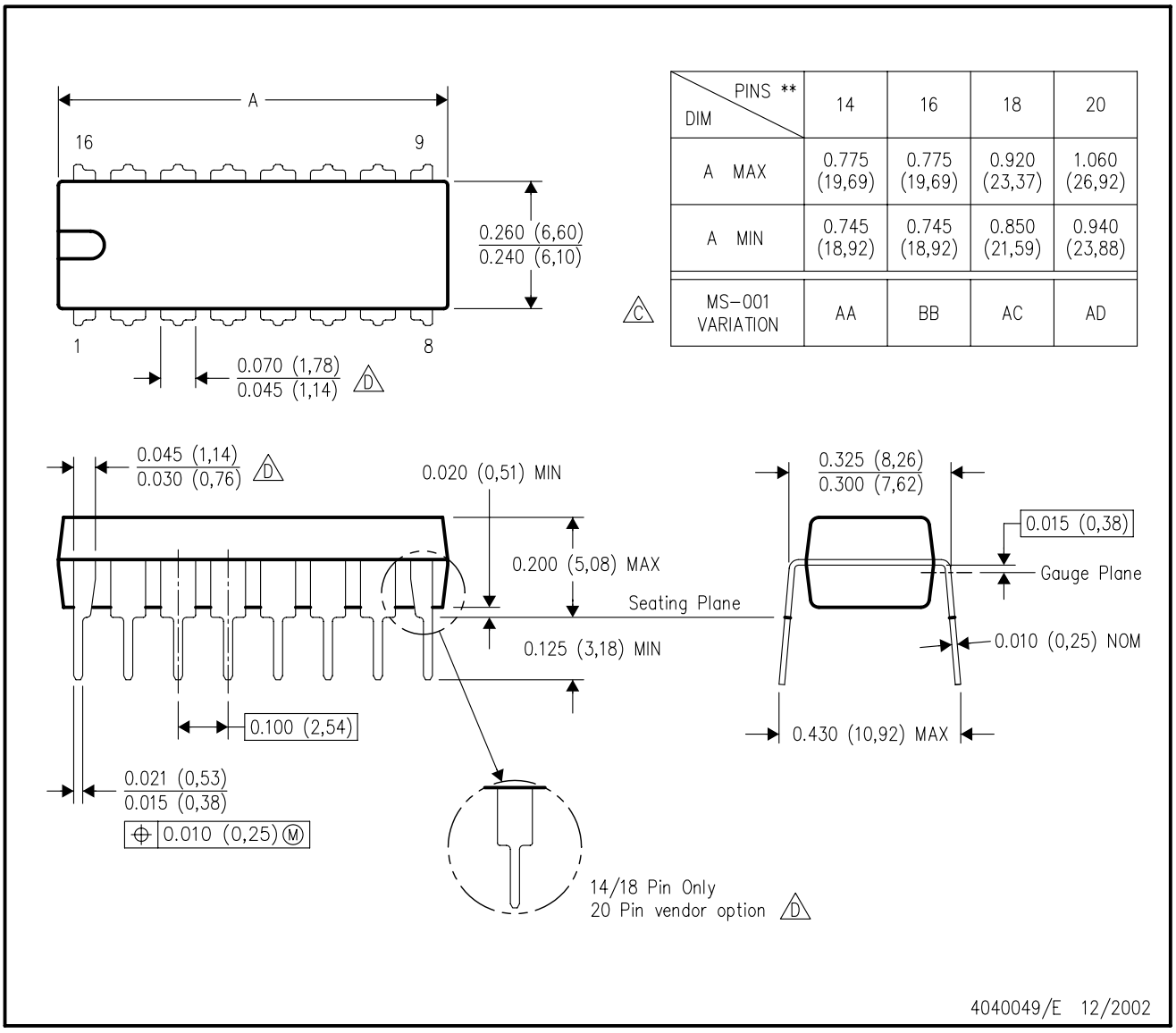


| DIM \ PINS ** | 14 | 16 | 18 | 20 |
|---|---|---|---|---|
| A MAX | 0.775 (19,69) | 0.775 (19,69) | 0.920 (23,37) | 1.060 (26,92) |
| A MIN | 0.745 (18,92) | 0.745 (18,92) | 0.850 (21,59) | 0.940 (23,88) |
| MS–001 VARIATION (C) | AA | BB | AC | AD |

NOTES:
A. All linear dimensions are in inches (millimeters).
B. This drawing is subject to change without notice.
C. Falls within JEDEC MS–001, except 18 and 20 pin minimum body length (Dim A).
D. The 20 pin end lead shoulder width is a vendor option, either half or full width.

D (R–PDSO–G14) PLASTIC SMALL OUTLINE

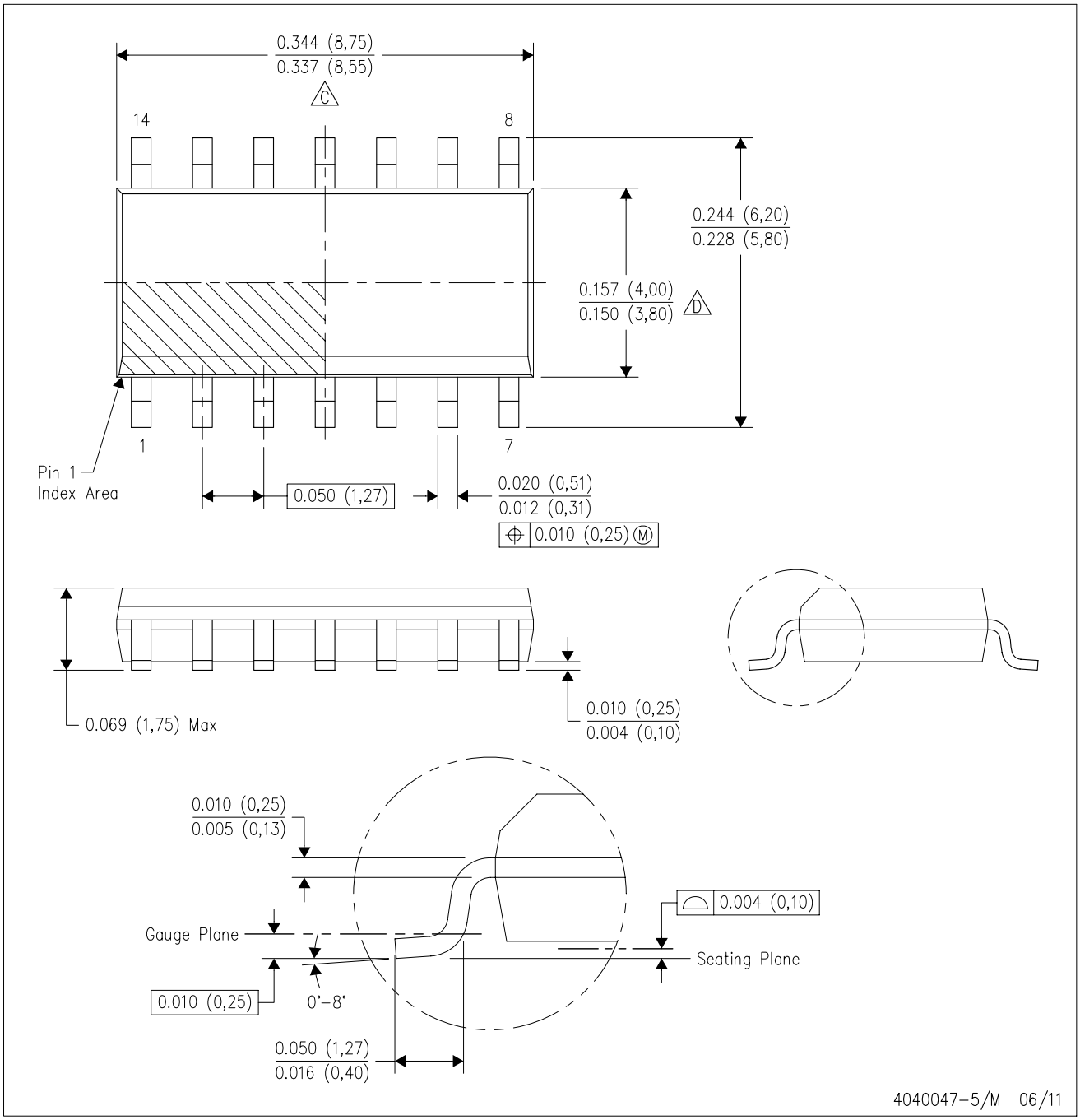


NOTES:
A. All linear dimensions are in inches (millimeters).
B. This drawing is subject to change without notice.
C. Body length does not include mold flash, protrusions, or gate burrs. Mold flash, protrusions, or gate burrs shall not exceed 0.006 (0,15) each side.
D. Body width does not include interlead flash. Interlead flash shall not exceed 0.017 (0,43) each side.
E. Reference JEDEC MS–012 variation AB.

D (R–PDSO–G14) PLASTIC SMALL OUTLINE

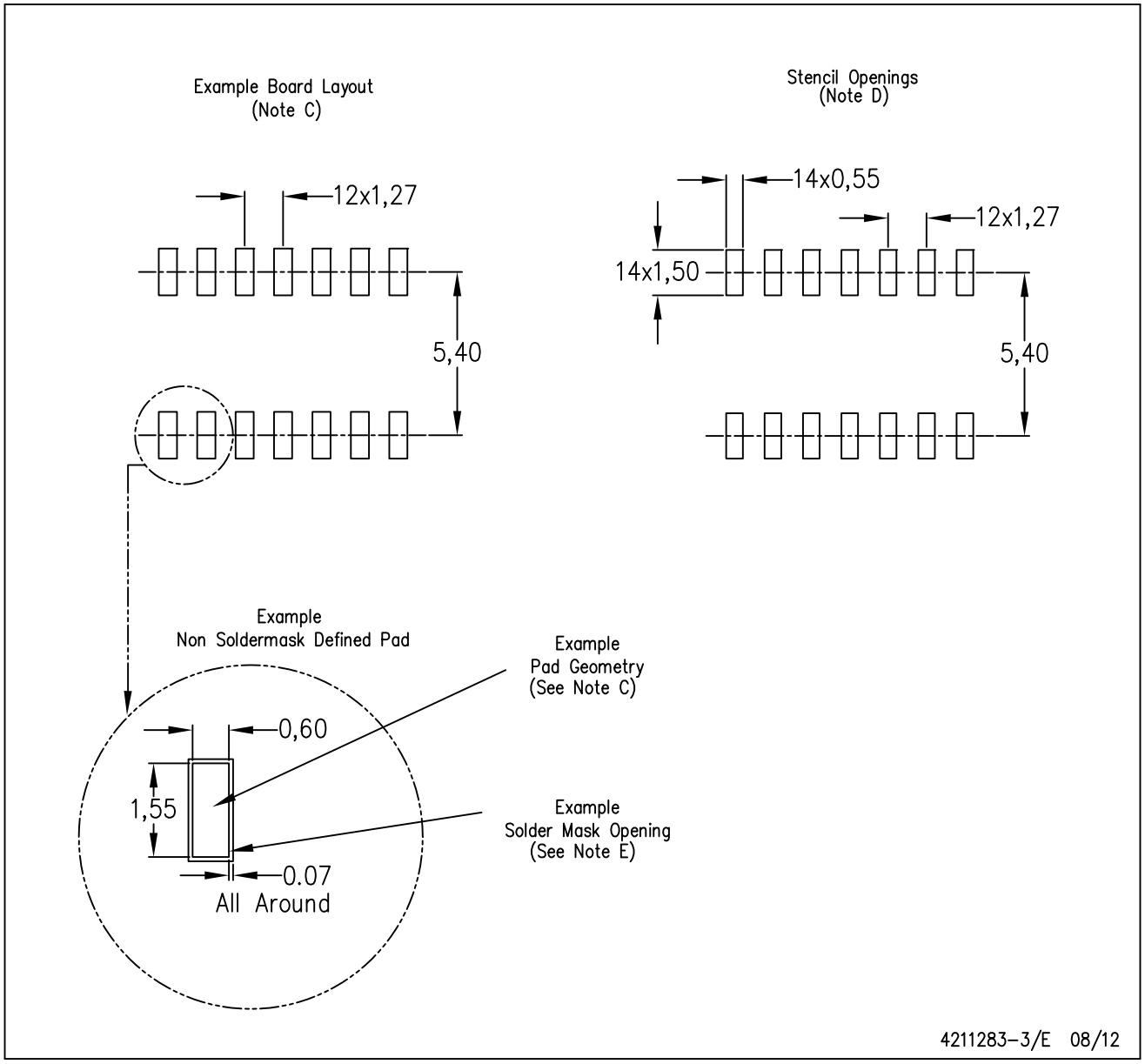


NOTES:
A. All linear dimensions are in millimeters.
B. This drawing is subject to change without notice.
C. Publication IPC–7351 is recommended for alternate designs.
D. Laser cutting apertures with trapezoidal walls and also rounding corners will offer better paste release. Customers should contact their board assembly site for stencil design recommendations. Refer to IPC–7525 for other stencil recommendations.
E. Customers should contact their board fabrication site for solder mask tolerances between and around signal pads.

## IMPORTANT NOTICE

Texas Instruments Incorporated and its subsidiaries (TI) reserve the right to make corrections, enhancements, improvements and other changes to its semiconductor products and services per JESD46C and to discontinue any product or service per JESD48B. Buyers should obtain the latest relevant information before placing orders and should verify that such information is current and complete. All semiconductor products (also referred to herein as “components”) are sold subject to TI’s terms and conditions of sale supplied at the time of order acknowledgment.

TI warrants performance of its components to the specifications applicable at the time of sale, in accordance with the warranty in TI’s terms and conditions of sale of semiconductor products. Testing and other quality control techniques are used to the extent TI deems necessary to support this warranty. Except where mandated by applicable law, testing of all parameters of each component is not necessarily performed.

TI assumes no liability for applications assistance or the design of Buyers’ products. Buyers are responsible for their products and applications using TI components. To minimize the risks associated with Buyers’ products and applications, Buyers should provide adequate design and operating safeguards.

TI does not warrant or represent that any license, either express or implied, is granted under any patent right, copyright, mask work right, or other intellectual property right relating to any combination, machine, or process in which TI components or services are used. Information published by TI regarding third-party products or services does not constitute a license to use such products or services or a warranty or endorsement thereof. Use of such information may require a license from a third party under the patents or other intellectual property of the third party, or a license from TI under the patents or other intellectual property of TI.

Reproduction of significant portions of TI information in TI data books or data sheets is permissible only if reproduction is without alteration and is accompanied by all associated warranties, conditions, limitations, and notices. TI is not responsible or liable for such altered documentation. Information of third parties may be subject to additional restrictions.

Resale of TI components or services with statements different from or beyond the parameters stated by TI for that component or service voids all express and any implied warranties for the associated TI component or service and is an unfair and deceptive business practice. TI is not responsible or liable for any such statements.

Buyer acknowledges and agrees that it is solely responsible for compliance with all legal, regulatory and safety-related requirements concerning its products, and any use of TI components in its applications, notwithstanding any applications-related information or support that may be provided by TI. Buyer represents and agrees that it has all the necessary expertise to create and implement safeguards which anticipate dangerous consequences of failures, monitor failures and their consequences, lessen the likelihood of failures that might cause harm and take appropriate remedial actions. Buyer will fully indemnify TI and its representatives against any damages arising out of the use of any TI components in safety-critical applications.

In some cases, TI components may be promoted specifically to facilitate safety-related applications. With such components, TI’s goal is to help enable customers to design and create their own end-product solutions that meet applicable functional safety standards and requirements. Nonetheless, such components are subject to these terms.

No TI components are authorized for use in FDA Class III (or similar life-critical medical equipment) unless authorized officers of the parties have executed a special agreement specifically governing such use.

Only those TI components which TI has specifically designated as military grade or “enhanced plastic” are designed and intended for use in military/aerospace applications or environments. Buyer acknowledges and agrees that any military or aerospace use of TI components which have ***not*** been so designated is solely at the Buyer's risk, and that Buyer is solely responsible for compliance with all legal and regulatory requirements in connection with such use.

TI has specifically designated certain components which meet ISO/TS16949 requirements, mainly for automotive use. Components which have not been so designated are neither designed nor intended for automotive use; and TI will not be responsible for any failure of such components to meet such requirements.

| **Products** | | **Applications** | |
|---|---|---|---|
| Audio | www.ti.com/audio | Automotive and Transportation | www.ti.com/automotive |
| Amplifiers | amplifier.ti.com | Communications and Telecom | www.ti.com/communications |
| Data Converters | dataconverter.ti.com | Computers and Peripherals | www.ti.com/computers |
| DLP® Products | www.dlp.com | Consumer Electronics | www.ti.com/consumer-apps |
| DSP | dsp.ti.com | Energy and Lighting | www.ti.com/energy |
| Clocks and Timers | www.ti.com/clocks | Industrial | www.ti.com/industrial |
| Interface | interface.ti.com | Medical | www.ti.com/medical |
| Logic | logic.ti.com | Security | www.ti.com/security |
| Power Mgmt | power.ti.com | Space, Avionics and Defense | www.ti.com/space-avionics-defense |
| Microcontrollers | microcontroller.ti.com | Video and Imaging | www.ti.com/video |
| RFID | www.ti-rfid.com | | |
| OMAP Mobile Processors | www.ti.com/omap | **TI E2E Community** | e2e.ti.com |
| Wireless Connectivity | www.ti.com/wirelessconnectivity | | |

Mailing Address: Texas Instruments, Post Office Box 655303, Dallas, Texas 75265
Copyright © 2012, Texas Instruments Incorporated

## О компании

ООО "ТрейдЭлектроникс" - это оперативные поставки широкого спектра электронных компонентов отечественного и импортного производства напрямую от производителей и с крупнейших мировых складов. Реализуемая нашей компанией продукция насчитывает более полумиллиона наименований.

Благодаря этому наша компания предлагает к поставке практически не ограниченный ассортимент компонентов как оптовыми, мелкооптовыми партиями, так и в розницу.

Наличие собственной эффективной системы логистики обеспечивает надежную поставку продукции по конкурентным ценам в точно указанные сроки.

Срок поставки со стоков в **Европе и Америке – от 3 до 14 дней.**

Срок поставки из **Азии – от 10 дней.**

Благодаря развитой сети поставщиков, помогаем в поиске и приобретении экзотичных или снятых с производства компонентов.

Предоставляем спец цены на элементы для создания инженерных сэмплов.

**Упорный труд, качественный результат дают нам право быть уверенными в себе и надежными для наших клиентов.**

## Наша компания это:

- Гарантия качества поставляемой продукции
- Широкий ассортимент
- Минимальные сроки поставок
- Техническая поддержка
- Подбор комплектации
- Индивидуальный подход
- Гибкое ценообразование

Наша организация особенно сильна в поставках модулей, микросхем, пассивных компонентов, ксайленсах (XC), EPF, EPM и силовой электроники.

Большой выбор предлагаемой продукции, различные виды оплаты и доставки, позволят Вам сэкономить время и получить максимум выгоды от сотрудничества с нами!

Trade Electronics.ru

гарантия бесперебойности производства и качества выпускаемой продукции

**Перечень производителей, продукцию которых мы поставляем на российский рынок**

AMD
ANALOG DEVICES
BOURNS
Coilcraft
élantec Semiconductor, Inc.
HARRIS
Infineon
JRC
MICREL
MOTOROLA
nichicon
PHILIPS
ROHM
SGS-THOMSON
Sipex
TAIYO YUDEN
TOKO
ZILOG
Winbond
Allegro
ATMEL
BURR - BROWN
EXAR
HITACHI
intel
Lattice
muRata
OKI
QUALCOMM
SAMSUNG
SHARP
SONY
TDK
TOSHIBA
KYOCERA
ALTERA
AVX
CITILYST
CYPRESS
FAIRCHILD SEMICONDUCTOR
HOLTEK
International IOR Rectifier
LINEAR TECHNOLOGY
MITSUBISHI
National Semiconductor
ON Semiconductor
REALTEK
SANYO
SHINDENGEN
SGS
TECCOR
TUNDRA
XILINX
Amphenol
Bay Linear
CIRRUS LOGIC
DALLAS
FUJITSU
IDT
intersil
MAXIM
molex
NEC
Panasonic
RENESAS
SII
SIEMENS
ST
Texas Instruments
VISHAY
ZETEX SEMICONDUCTORS

Trade Electronics.ru

гарантия бесперебойности производства и качества выпускаемой продукции

С удовольствием будем прорабатывать для Вас поставки всех необходимых компонентов по текущим запросам для скорейшего выявления групп элементов, по которым сотрудничество именно с нашей компанией будет для Вас максимально выгодным!

С уважением,

Менеджер отдела продаж ООО

«Трейд Электроникс»

Шишлаков Евгений

8 (495)668-30-28 доб 169

manager28@tradeelectronics.ru

http://www.tradeelectronics.ru/