# DATA SHEET

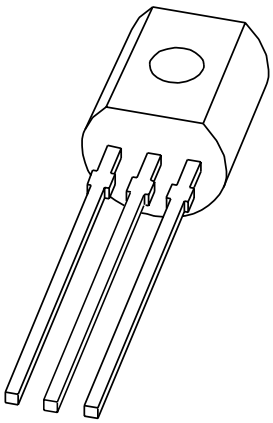

# PH2222A
## NPN switching transistor

Product specification
Supersedes data of 1997 Sep 04

1999 Apr 27

Philips
Semiconductors

PHILIPS

# NPN switching transistor PH2222A

## FEATURES

- High current (max. 600 mA)
- Low voltage (max. 40 V).

## APPLICATIONS

- Switching and linear amplification.

## DESCRIPTION

NPN switching transistor in a TO-92; SOT54 plastic package. PNP complement: PH2907A.

## PINNING

| PIN | DESCRIPTION |
|---|---|
| 1 | emitter |
| 2 | base |
| 3 | collector |

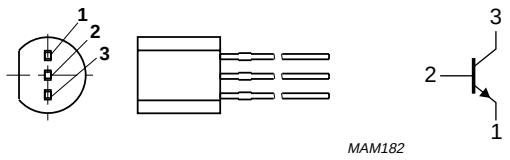


Fig.1 Simplified outline (TO-92; SOT54) and symbol.

## LIMITING VALUES

In accordance with the Absolute Maximum Rating System (IEC 134).

| SYMBOL | PARAMETER | CONDITIONS | MIN. | MAX. | UNIT |
|---|---|---|---|---|---|
| $V_{CBO}$ | collector-base voltage | open emitter | – | 75 | V |
| $V_{CEO}$ | collector-emitter voltage | open base | – | 40 | V |
| $V_{EBO}$ | emitter-base voltage | open collector | – | 6 | V |
| $I_C$ | collector current (DC) | | – | 600 | mA |
| $I_{CM}$ | peak collector current | | – | 800 | mA |
| $I_{BM}$ | peak base current | | – | 200 | mA |
| $P_{tot}$ | total power dissipation | $T_{amb} \leq 25$ °C | – | 500 | mW |
| $T_{stg}$ | storage temperature | | –65 | +150 | °C |
| $T_j$ | junction temperature | | – | 150 | °C |
| $T_{amb}$ | operating ambient temperature | | –65 | +150 | °C |

## THERMAL CHARACTERISTICS

| SYMBOL | PARAMETER | CONDITIONS | VALUE | UNIT |
|---|---|---|---|---|
| $R_{th\ j\text{-}a}$ | thermal resistance from junction to ambient | note 1 | 250 | K/W |

**Note**

1. Transistor mounted on an FR4 printed-circuit board.

## CHARACTERISTICS

$T_j$ = 25 °C unless otherwise specified.

| SYMBOL | PARAMETER | CONDITIONS | MIN. | MAX. | UNIT |
|---|---|---|---|---|---|
| $I_{CBO}$ | collector cut-off current | $I_E = 0$; $V_{CB} = 60$ V | – | 10 | nA |
| | | $I_E = 0$; $V_{CB} = 60$ V; $T_{amb} = 150$ °C | – | 10 | μA |
| $I_{EBO}$ | emitter cut-off current | $I_C = 0$; $V_{EB} = 3$ V | – | 10 | nA |
| $h_{FE}$ | DC current gain | $I_C = 0.1$ mA; $V_{CE} = 10$ V | 35 | – | |
| | | $I_C = 1$ mA; $V_{CE} = 10$ V | 50 | – | |
| | | $I_C = 10$ mA; $V_{CE} = 10$ V | 75 | – | |
| | | $I_C = 10$ mA; $V_{CE} = 10$ V; $T_{amb} = -55$ °C | 35 | – | |
| | | $I_C = 150$ mA; $V_{CE} = 1$ V; note 1 | 50 | – | |
| | | $I_C = 150$ mA; $V_{CE} = 10$ V; note 1 | 100 | 300 | |
| | | $I_C = 500$ mA; $V_{CE} = 10$ V; note 1 | 40 | – | |
| $V_{CEsat}$ | collector-emitter saturation voltage | $I_C = 150$ mA; $I_B = 15$ mA; note 1 | – | 300 | mV |
| | | $I_C = 500$ mA; $I_B = 50$ mA; note 1 | – | 1 | V |
| $V_{BEsat}$ | base-emitter saturation voltage | $I_C = 150$ mA; $I_B = 15$ mA; note 1 | 0.6 | 1.2 | V |
| | | $I_C = 500$ mA; $I_B = 50$ mA; note 1 | – | 2 | V |
| $C_c$ | collector capacitance | $I_E = i_e = 0$; $V_{CB} = 10$ V; f = 1 MHz | – | 8 | pF |
| $C_e$ | emitter capacitance | $I_C = i_c = 0$; $V_{EB} = 500$ mV; f = 1 MHz | – | 25 | pF |
| $f_T$ | transition frequency | $I_C = 20$ mA; $V_{CE} = 20$ V; f = 100 MHz | 300 | – | MHz |
| F | noise figure | $I_C = 200$ μA; $V_{CE} = 5$ V; $R_S = 2$ kΩ; f = 1 kHz; B = 200 Hz | – | 4 | db |
| **Switching times (between 10% and 90% levels);** see Fig.2 | | | | | |
| $t_{on}$ | turn-on time | $I_{Con} = 150$ mA; $I_{Bon} = 15$ mA; $I_{Boff} = -15$ mA | – | 35 | ns |
| $t_d$ | delay time | | – | 15 | ns |
| $t_r$ | rise time | | – | 20 | ns |
| $t_{off}$ | turn-off time | | – | 250 | ns |
| $t_s$ | storage time | | – | 200 | ns |
| $t_f$ | fall time | | – | 60 | ns |

**Note**

1. Pulse test: $t_p \leq 300$ μs; $\delta \leq 0.02$.

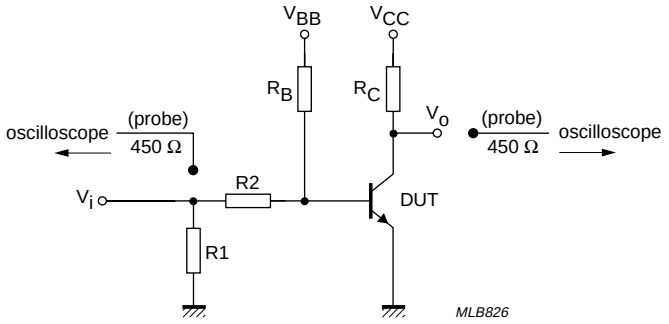


$V_i$ = 9.5 V; T = 500 µs; $t_p$ = 10 µs; $t_r = t_f \leq 3$ ns.
R1 = 68 Ω; R2 = 325 Ω; $R_B$ = 325 Ω; $R_C$ = 160 Ω.
$V_{BB}$ = −3.5 V; $V_{CC}$ = 29.5 V.
Oscilloscope: input impedance $Z_i$ = 50 Ω.

Fig.2 Test circuit for switching times.

## PACKAGE OUTLINE

**Plastic single-ended leaded (through hole) package; 3 leads** **SOT54**

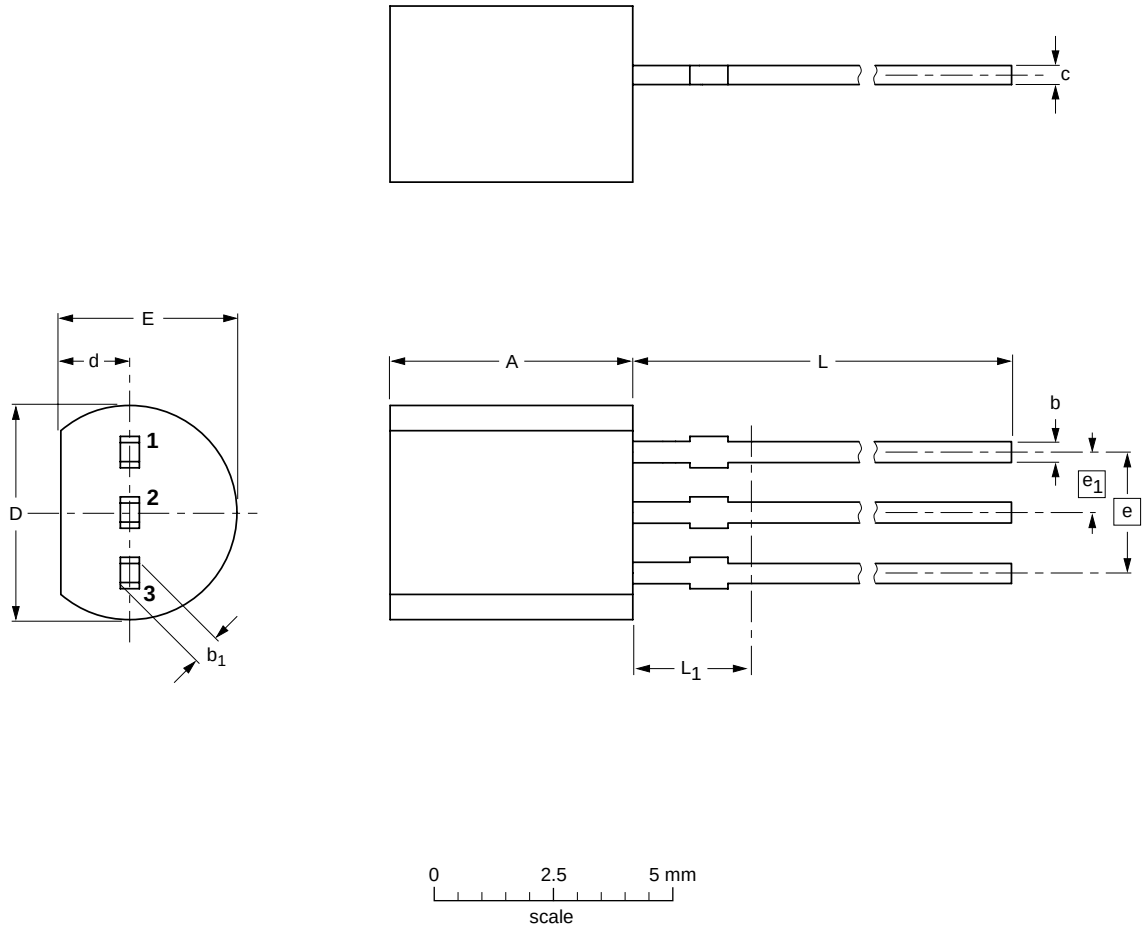


**DIMENSIONS (mm are the original dimensions)**

| UNIT | A | b | $b_1$ | c | D | d | E | e | $e_1$ | L | $L_1$(1) |
|---|---|---|---|---|---|---|---|---|---|---|---|
| mm | 5.2<br>5.0 | 0.48<br>0.40 | 0.66<br>0.56 | 0.45<br>0.40 | 4.8<br>4.4 | 1.7<br>1.4 | 4.2<br>3.6 | 2.54 | 1.27 | 14.5<br>12.7 | 2.5 |

**Note**

1. Terminal dimensions within this zone are uncontrolled to allow for flow of plastic and terminal irregularities.

| OUTLINE VERSION | REFERENCES | | | | EUROPEAN PROJECTION | ISSUE DATE |
|---|---|---|---|---|---|---|
| | IEC | JEDEC | EIAJ | | | |
| SOT54 | | TO-92 | SC-43 | | | 97-02-28 |

## DEFINITIONS

| **Data sheet status** | |
|---|---|
| Objective specification | This data sheet contains target or goal specifications for product development. |
| Preliminary specification | This data sheet contains preliminary data; supplementary data may be published later. |
| Product specification | This data sheet contains final product specifications. |
| **Limiting values** | |
| Limiting values given are in accordance with the Absolute Maximum Rating System (IEC 134). Stress above one or more of the limiting values may cause permanent damage to the device. These are stress ratings only and operation of the device at these or at any other conditions above those given in the Characteristics sections of the specification is not implied. Exposure to limiting values for extended periods may affect device reliability. | |
| **Application information** | |
| Where application information is given, it is advisory and does not form part of the specification. | |

## LIFE SUPPORT APPLICATIONS

These products are not designed for use in life support appliances, devices, or systems where malfunction of these products can reasonably be expected to result in personal injury. Philips customers using or selling these products for use in such applications do so at their own risk and agree to fully indemnify Philips for any damages resulting from such improper use or sale.

**NOTES**

# Philips Semiconductors – a worldwide company


**Argentina:** see South America

**Australia:** 34 Waterloo Road, NORTH RYDE, NSW 2113, Tel. +61 2 9805 4455, Fax. +61 2 9805 4466

**Austria:** Computerstr. 6, A-1101 WIEN, P.O. Box 213, Tel. +43 1 60 101 1248, Fax. +43 1 60 101 1210

**Belarus:** Hotel Minsk Business Center, Bld. 3, r. 1211, Volodarski Str. 6, 220050 MINSK, Tel. +375 172 20 0733, Fax. +375 172 20 0773

**Belgium:** see The Netherlands

**Brazil:** see South America

**Bulgaria:** Philips Bulgaria Ltd., Energoproject, 15th floor, 51 James Bourchier Blvd., 1407 SOFIA, Tel. +359 2 68 9211, Fax. +359 2 68 9102

**Canada:** PHILIPS SEMICONDUCTORS/COMPONENTS, Tel. +1 800 234 7381, Fax. +1 800 943 0087

**China/Hong Kong:** 501 Hong Kong Industrial Technology Centre, 72 Tat Chee Avenue, Kowloon Tong, HONG KONG, Tel. +852 2319 7888, Fax. +852 2319 7700

**Colombia:** see South America

**Czech Republic:** see Austria

**Denmark:** Sydhavnsgade 23, 1780 COPENHAGEN V, Tel. +45 33 29 3333, Fax. +45 33 29 3905

**Finland:** Sinikalliontie 3, FIN-02630 ESPOO, Tel. +358 9 615 800, Fax. +358 9 6158 0920

**France:** 51 Rue Carnot, BP317, 92156 SURESNES Cedex, Tel. +33 1 4099 6161, Fax. +33 1 4099 6427

**Germany:** Hammerbrookstraße 69, D-20097 HAMBURG, Tel. +49 40 2353 60, Fax. +49 40 2353 6300

**Hungary:** see Austria

**India:** Philips INDIA Ltd, Band Box Building, 2nd floor, 254-D, Dr. Annie Besant Road, Worli, MUMBAI 400 025, Tel. +91 22 493 8541, Fax. +91 22 493 0966

**Indonesia:** PT Philips Development Corporation, Semiconductors Division, Gedung Philips, Jl. Buncit Raya Kav.99-100, JAKARTA 12510, Tel. +62 21 794 0040 ext. 2501, Fax. +62 21 794 0080

**Ireland:** Newstead, Clonskeagh, DUBLIN 14, Tel. +353 1 7640 000, Fax. +353 1 7640 200

**Israel:** RAPAC Electronics, 7 Kehilat Saloniki St, PO Box 18053, TEL AVIV 61180, Tel. +972 3 645 0444, Fax. +972 3 649 1007

**Italy:** PHILIPS SEMICONDUCTORS, Piazza IV Novembre 3, 20124 MILANO, Tel. +39 2 6752 2531, Fax. +39 2 6752 2557

**Japan:** Philips Bldg 13-37, Kohnan 2-chome, Minato-ku, TOKYO 108-8507, Tel. +81 3 3740 5130, Fax. +81 3 3740 5077

**Korea:** Philips House, 260-199 Itaewon-dong, Yongsan-ku, SEOUL, Tel. +82 2 709 1412, Fax. +82 2 709 1415

**Malaysia:** No. 76 Jalan Universiti, 46200 PETALING JAYA, SELANGOR, Tel. +60 3 750 5214, Fax. +60 3 757 4880

**Mexico:** 5900 Gateway East, Suite 200, EL PASO, TEXAS 79905, Tel. +9-5 800 234 7381, Fax +9-5 800 943 0087

**Middle East:** see Italy

**Netherlands:** Postbus 90050, 5600 PB EINDHOVEN, Bldg. VB, Tel. +31 40 27 82785, Fax. +31 40 27 88399

**New Zealand:** 2 Wagener Place, C.P.O. Box 1041, AUCKLAND, Tel. +64 9 849 4160, Fax. +64 9 849 7811

**Norway:** Box 1, Manglerud 0612, OSLO, Tel. +47 22 74 8000, Fax. +47 22 74 8341

**Pakistan:** see Singapore

**Philippines:** Philips Semiconductors Philippines Inc., 106 Valero St. Salcedo Village, P.O. Box 2108 MCC, MAKATI, Metro MANILA, Tel. +63 2 816 6380, Fax. +63 2 817 3474

**Poland:** Ul. Lukiska 10, PL 04-123 WARSZAWA, Tel. +48 22 612 2831, Fax. +48 22 612 2327

**Portugal:** see Spain

**Romania:** see Italy

**Russia:** Philips Russia, Ul. Usatcheva 35A, 119048 MOSCOW, Tel. +7 095 755 6918, Fax. +7 095 755 6919

**Singapore:** Lorong 1, Toa Payoh, SINGAPORE 319762, Tel. +65 350 2538, Fax. +65 251 6500

**Slovakia:** see Austria

**Slovenia:** see Italy

**South Africa:** S.A. PHILIPS Pty Ltd., 195-215 Main Road Martindale, 2092 JOHANNESBURG, P.O. Box 7430 Johannesburg 2000, Tel. +27 11 470 5911, Fax. +27 11 470 5494

**South America:** Al. Vicente Pinzon, 173, 6th floor, 04547-130 SÃO PAULO, SP, Brazil, Tel. +55 11 821 2333, Fax. +55 11 821 2382

**Spain:** Balmes 22, 08007 BARCELONA, Tel. +34 93 301 6312, Fax. +34 93 301 4107

**Sweden:** Kottbygatan 7, Akalla, S-16485 STOCKHOLM, Tel. +46 8 5985 2000, Fax. +46 8 5985 2745

**Switzerland:** Allmendstrasse 140, CH-8027 ZÜRICH, Tel. +41 1 488 2741 Fax. +41 1 488 3263

**Taiwan:** Philips Semiconductors, 6F, No. 96, Chien Kuo N. Rd., Sec. 1, TAIPEI, Taiwan Tel. +886 2 2134 2886, Fax. +886 2 2134 2874

**Thailand:** PHILIPS ELECTRONICS (THAILAND) Ltd., 209/2 Sanpavuth-Bangna Road Prakanong, BANGKOK 10260, Tel. +66 2 745 4090, Fax. +66 2 398 0793

**Turkey:** Talatpasa Cad. No. 5, 80640 GÜLTEPE/ISTANBUL, Tel. +90 212 279 2770, Fax. +90 212 282 6707

**Ukraine**: PHILIPS UKRAINE, 4 Patrice Lumumba str., Building B, Floor 7, 252042 KIEV, Tel. +380 44 264 2776, Fax. +380 44 268 0461

**United Kingdom:** Philips Semiconductors Ltd., 276 Bath Road, Hayes, MIDDLESEX UB3 5BX, Tel. +44 181 730 5000, Fax. +44 181 754 8421

**United States:** 811 East Arques Avenue, SUNNYVALE, CA 94088-3409, Tel. +1 800 234 7381, Fax. +1 800 943 0087

**Uruguay:** see South America

**Vietnam:** see Singapore

**Yugoslavia:** PHILIPS, Trg N. Pasica 5/v, 11000 BEOGRAD, Tel. +381 11 62 5344, Fax.+381 11 63 5777

**For all other countries apply to:** Philips Semiconductors, International Marketing & Sales Communications, Building BE-p, P.O. Box 218, 5600 MD EINDHOVEN, The Netherlands, Fax. +31 40 27 24825

**Internet:** http://www.semiconductors.philips.com



© Philips Electronics N.V. 1999 SCA63

All rights are reserved. Reproduction in whole or in part is prohibited without the prior written consent of the copyright owner.

The information presented in this document does not form part of any quotation or contract, is believed to be accurate and reliable and may be changed without notice. No liability will be accepted by the publisher for any consequence of its use. Publication thereof does not convey nor imply any license under patent- or other industrial or intellectual property rights.



Printed in The Netherlands 115002/00/04/pp8 Date of release: 1999 Apr 27 Document order number: 9397 750 05428


Let's make things better.

Philips Semiconductors

PHILIPS

## О компании

ООО "ТрейдЭлектроникс" - это оперативные поставки широкого спектра электронных компонентов отечественного и импортного производства напрямую от производителей и с крупнейших мировых складов. Реализуемая нашей компанией продукция насчитывает более полумиллиона наименований.

Благодаря этому наша компания предлагает к поставке практически не ограниченный ассортимент компонентов как оптовыми, мелкооптовыми партиями, так и в розницу.

Наличие собственной эффективной системы логистики обеспечивает надежную поставку продукции по конкурентным ценам в точно указанные сроки.

Срок поставки со стоков в **Европе и Америке – от 3 до 14 дней.**

Срок поставки из **Азии – от 10 дней.**

Благодаря развитой сети поставщиков, помогаем в поиске и приобретении экзотичных или снятых с производства компонентов.

Предоставляем спец цены на элементы для создания инженерных сэмплов.

**Упорный труд, качественный результат дают нам право быть уверенными в себе и надежными для наших клиентов.**

## Наша компания это:

- Гарантия качества поставляемой продукции
- Широкий ассортимент
- Минимальные сроки поставок
- Техническая поддержка
- Подбор комплектации
- Индивидуальный подход
- Гибкое ценообразование

Наша организация особенно сильна в поставках модулей, микросхем, пассивных компонентов, ксайленсах (XC), EPF, EPM и силовой электроники.

Большой выбор предлагаемой продукции, различные виды оплаты и доставки, позволят Вам сэкономить время и получить максимум выгоды от сотрудничества с нами!

Trade Electronics.ru

гарантия бесперебойности производства и качества выпускаемой продукции

**Перечень производителей, продукцию которых мы поставляем на российский рынок**

AMD
ANALOG DEVICES
BOURNS
Coilcraft
élantec Semiconductor, Inc.
HARRIS
Infineon
JRC
MICREL
MOTOROLA
nichicon
PHILIPS
ROHM
SGS-THOMSON
Sipex
TAIYO YUDEN
TOKO
ZILOG
Winbond
Allegro
ATMEL
BURR - BROWN
EXAR
HITACHI
intel
Lattice
muRata
OKI
QUALCOMM
SAMSUNG
SHARP
SONY
TDK
TOSHIBA
KYOCERA
ALTERA
AVX
CITILYST
CYPRESS
FAIRCHILD SEMICONDUCTOR
HOLTEK
International IOR Rectifier
LINEAR TECHNOLOGY
MITSUBISHI
National Semiconductor
ON Semiconductor
REALTEK
SANYO
SHINDENGEN
SGS
TECCOR
TUNDRA
XILINX
Amphenol
Bay Linear
CIRRUS LOGIC
DALLAS
FUJITSU
IDT
intersil
MAXIM
molex
NEC
Panasonic
RENESAS
SII
SIEMENS
ST
Texas Instruments
VISHAY
ZETEX SEMICONDUCTORS

Trade Electronics.ru

гарантия бесперебойности производства и качества выпускаемой продукции

С удовольствием будем прорабатывать для Вас поставки всех необходимых компонентов по текущим запросам для скорейшего выявления групп элементов, по которым сотрудничество именно с нашей компанией будет для Вас максимально выгодным!

С уважением,

Менеджер отдела продаж ООО

«Трейд Электроникс»

Шишлаков Евгений

8 (495)668-30-28 доб 169

manager28@tradeelectronics.ru

http://www.tradeelectronics.ru/